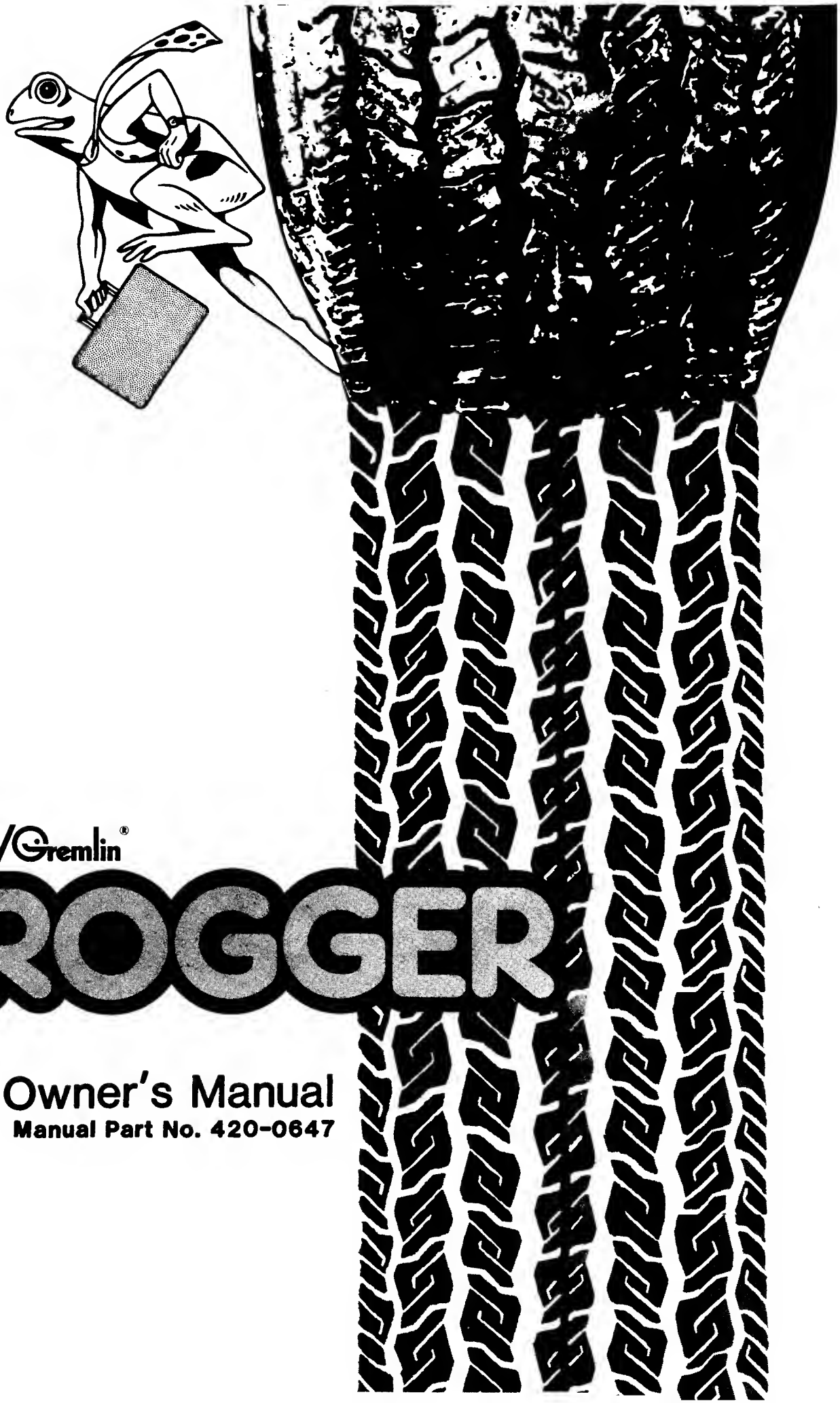

SEGA®/Gremlin®

FROGGER

Owner's Manual

Manual Part No. 420-0647

FROGGER™

OPERATING INSTRUCTIONS

AND

SERVICE MANUAL

MANUFACTURED BY

SEGA®/Gremlin®

TLX 910-335-1621

FROGGER OWNER'S MANUAL
Copyright - 1981 by SEGA/Gremlin, All Rights Reserved

INTRODUCTION

FROGGER is an electronic game that makes extensive use of digital integrated circuitry and television monitor concepts. This manual is designed for the maintenance technician who possesses a general knowledge of solid state circuitry, microprocessor and digital integrated circuitry, and TV monitor concepts. Any individual not knowledgeable in these areas should not attempt repair of the electronic portion of the game.

IMPORTANT NOTES

The following note is included in compliance with FCC rules:
WARNING: This equipment generates, uses, and can radiate radio frequency energy and if not installed and used in accordance with the instructions manual, may cause interference to radio communications. As temporarily permitted by regulation, it has not been tested for compliance with the limits for Class A computing devices pursuant to Subpart J of Part 15 FCC Rules, which are designed to provide reasonable protection against interference in which case the user at his own expense will be required to take whatever measures may be required to correct the interference.

TRANSFORMER VOLTAGE CONVERSION INSTRUCTIONS

Before plugging in your game, make sure that the game voltage is correct for your location. Locate the two leads from the AC junction box to the power transformer. For 110 VAC, they should be connected to terminals 1 and 3 on the power transformer. For 100 VAC, connect 1 and 2, and for 220 VAC applications, they should be connected to 1 and 4. You will also notice on the AC junction box that there is a safety interlock switch. When the rear panel is in place the switch is depressed and the game receives power. Removing the rear panel, the switch returns to its original position and the power is cut off from the game. For servicing, this switch can be pulled out and power will be restored.

OTHER NOTES

NEVER replace any components with anything other than exact replacement parts.

NEVER remove circuit board connections while power is on.

DO NOT replace the fuse with anything other than the proper value. A blown fuse indicates an overload condition within the game. Replacing the fuse with a higher value can cause severe damage to internal components if an overload occurs.

ALWAYS consult the manual before attempting repairs.

CORRESPONDENCE regarding this game should be addressed to:

SEGA/Gremlin
8401 Aero Drive
San Diego, California 92123
800-854-1099

FROGGER GAME CONCEPT

Frogger is a one or two player game in which players move their frog from the bottom to the top of the screen. This is achieved by overcoming a number of hazards without getting run over or drowned.

The first half of the screen is a bi-directional flow of traffic including buses, cars and race cars. Players must avoid these vehicles. Frogs can move safely with the flow of traffic to make their way to the second half of the screen which consists of a river with fast moving logs and sinkable turtles. Frogs must hop on the backs of the logs and the sinkable turtles to get to the home base at the top of the screen. At random times throughout the game play a lady frog will appear on a log. Bonus points are scored if your frog successfully hops on the back of the lady frog and escorts her safely home. A fly will also appear randomly in a home base. Bonus points can be scored if your frog hops in the home base when the fly is present. Sinking turtles also swiftly move across the river with the logs. If a frog is unsuccessful in hopping on a turtle's back, the frog will sink and drown. Crocodiles, snakes and otters also roam the moving river waiting to eat frogs on their way up to the home base. Players can hop on their back (except the snake, whose touch is deadly), but they must avoid their open mouths. The frog must be lined up perfectly to enter one of the five home bases. You must maneuver the frogs to their home base within the alotted time (sixty beats on the timer).

Game Action

The frog can move vertically or horizontally by maneuvering the joystick. You must maneuver your frog swiftly and precisely without getting run over, drowned or eaten by the creatures that roam the flowing river. Avoiding traffic. deadly snakes, otters, crocodiles and the treacherous diving turtles make game action stimulating in Frogger.

Scoring

10 points are scored for each safe jump. Arriving safely home scores 50 points and for beating the timer (10 points per beat saved). Bonus points are obtained by escorting home a lady frog (200). Gobbling an insect (200) and safely getting all five (adjustable) frogs home (1000). If you get all five (adjustable) frogs home, then you go on to a swifter more difficult round. Game ends when all frogs are drowned or devoured.

FROGGER GAME OPTIONS

GAME OPTIONS	1	2	3	4	5	6
3 FROGS	ON	ON	X	X	X	X
5 FROGS	ON	OFF	X	X	X	X
7 FROGS	OFF	ON	X	X	X	X
256 FROGS	OFF	OFF	X	X	X	X
UPRIGHT	X	X	ON	X	X	X
COCKTAIL	X	X	OFF	X	X	X
COIN/CREDIT OPTIONS						
Coin Mech 1						
1 coin/1 play	X	X	X	ON	ON	X
2 coin/1 play	X	X	X	ON	OFF	X
2 coin/1 play	X	X	X	OFF	ON	X
1 coin/1 play	X	X	X	OFF	OFF	X
Coin Mech 2						
1 coin/1 play	X	X	X	ON	ON	X
2 coin/1 play	X	X	X	ON	OFF	X
1 coin/5 play	X	X	X	OFF	ON	X
1 coin/6 play	X	X	X	OFF	OFF	X

X = Doesn't Matter

TROUBLE SHOOTING

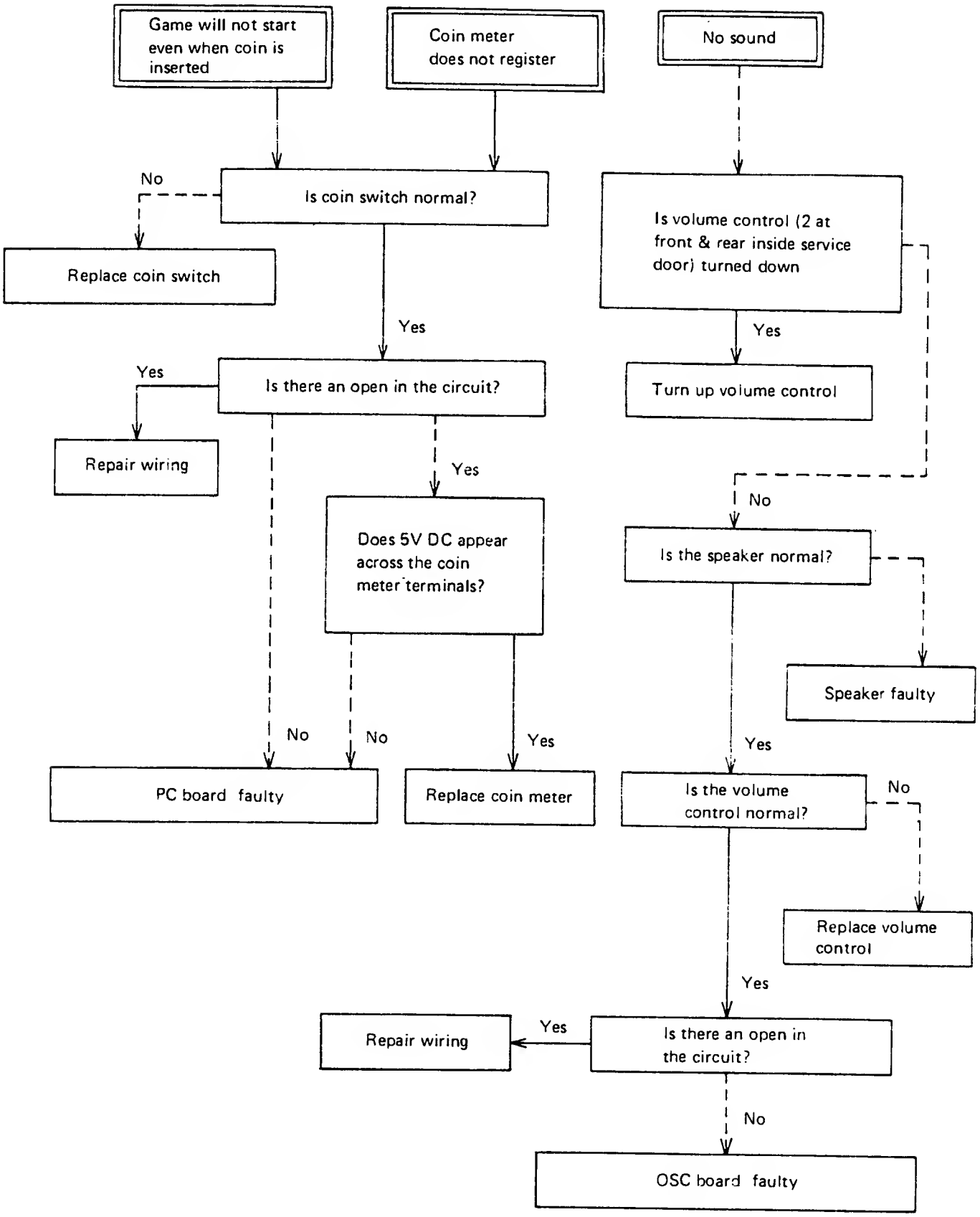

1. 834-0068 SYNC. RELATION FAULTY

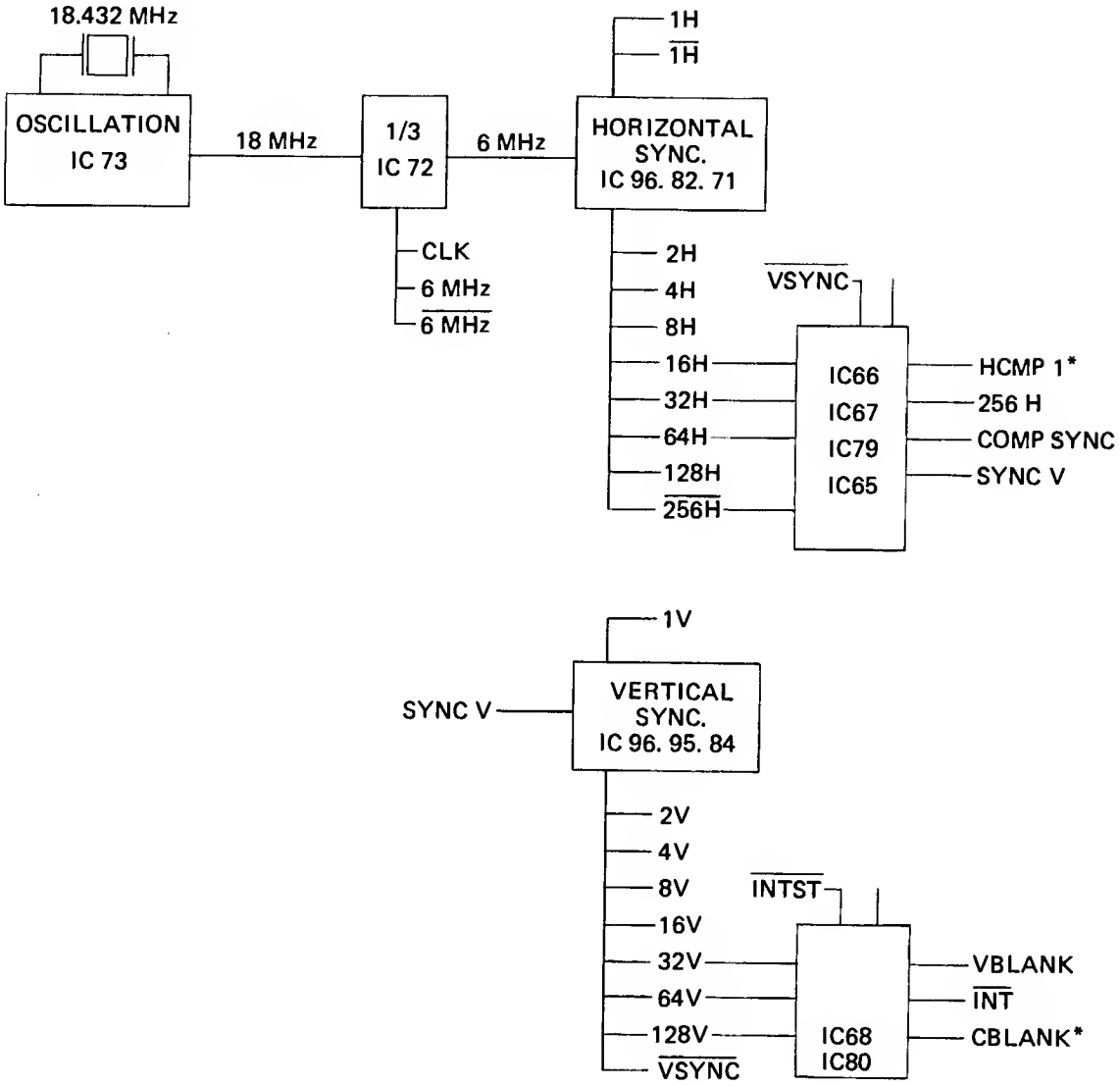

BLOCK DIAGRAM FOR OSCILLATION, HORIZONTAL · VERTICAL SYNC.

a. **PICTURE DRIFTS AWAY**

IT COULD POSSIBLY BE THE FAULT FROM THE SYNCHRONIZING CIRCUIT. FOLLOW THE FLOW CHART BELOW FOR INSPECTION.

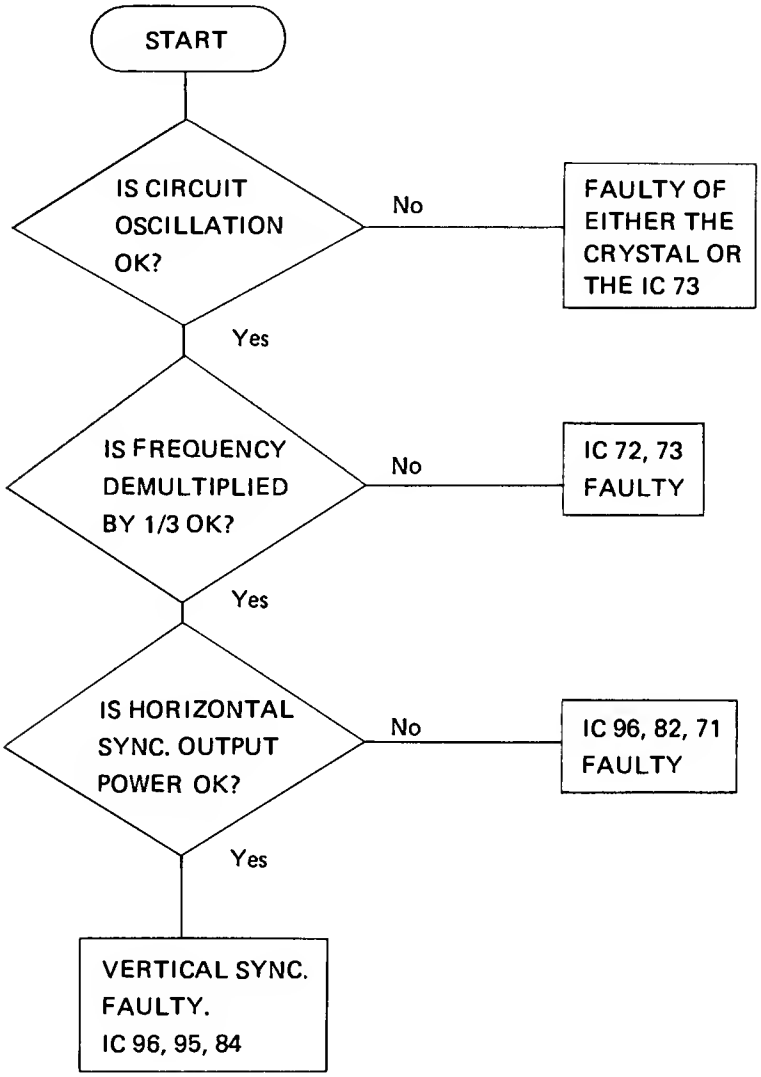

b. PICTURE WILL NOT APPEAR

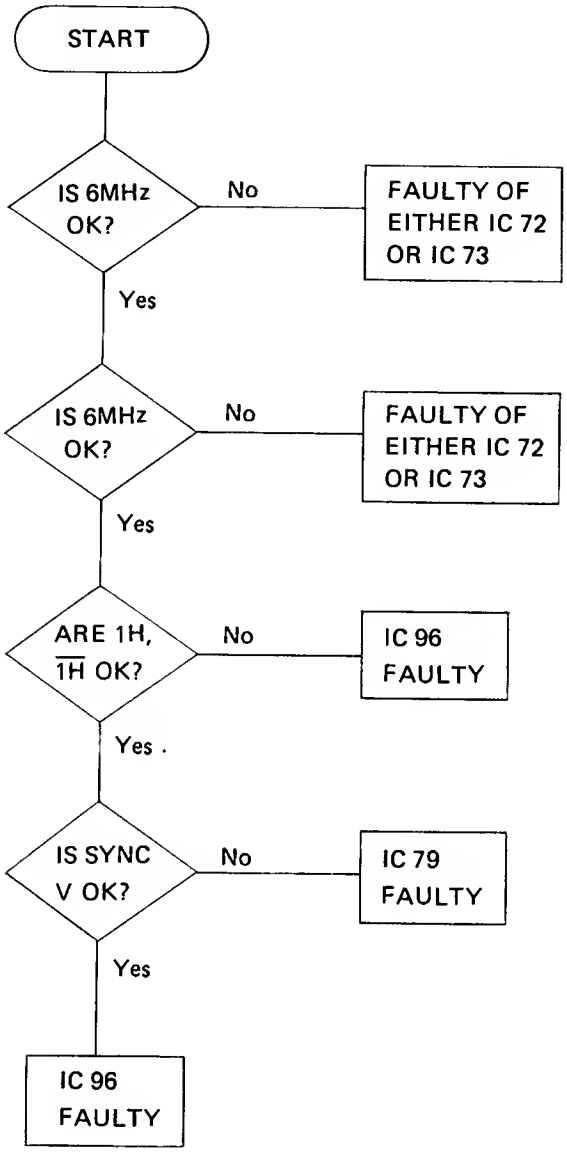

2. RESET FAULTY

a. WHEN GAME STARTS, PICTURE DISAPPEARS.

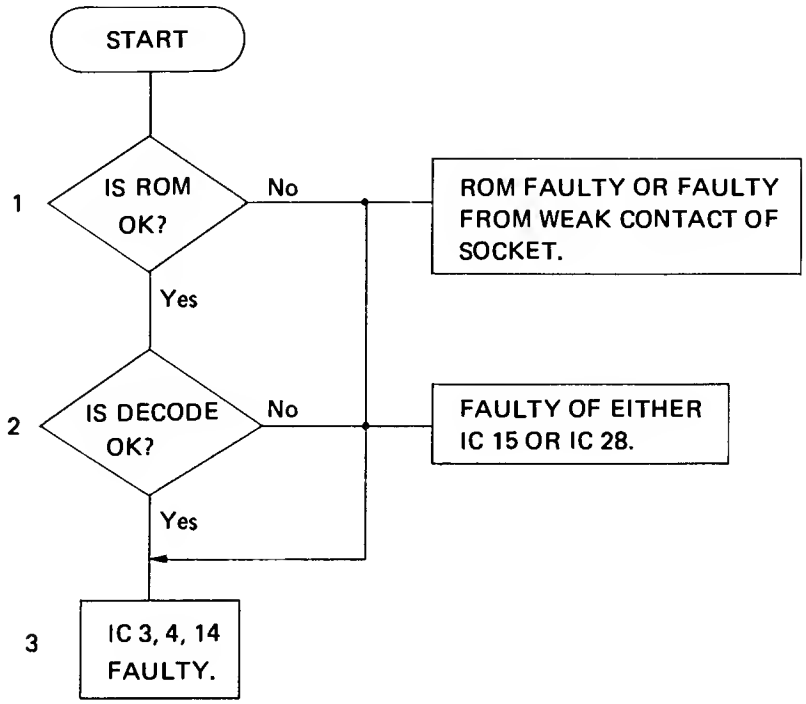

1 IS THE CHIP SELECT OF ROM FUNCTIONING PROPERLY?
IS THE ADDRESS DATA BUS FUNCTIONING PROPERLY?

2 ARE THE OUTPUT POWER PIN 12, 13, 14, 15 OF IC 15 FUNCTIONING PROPERLY?
ARE THE INPUT POWER PIN 1, 2, 3, 4, 5, 6 OF IC 15 FUNCTIONING PROPERLY?
CHECK ESPECIALLY ON 6TH PIN OF IC 30 TO THE 4TH, 5TH PIN AS WELL.
ARE PINS 10, 13, 14, 15 OF IC 28 NORMAL.

3 BUFFER FOR ADDRESS BUS OF IC 3, 4, 14 FAULTY?
ESPECIALLY, TOO MUCH FAULTY OF TEMPERATURE.

b. WHEN INSERTING COIN, IT RESETS.

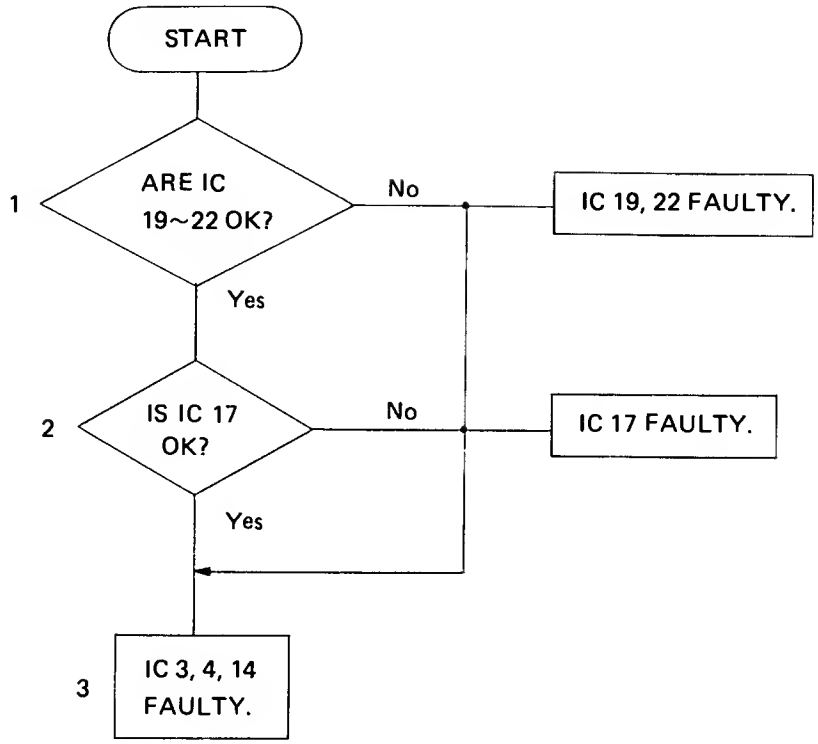

1 IS THE CHIP SELECT (8 PIN) OF IC 19, 20, 21, 22 FUNCTIONING PROPERLY?
IS THE ADDRESS DATA BUS FUNCTIONING PROPERLY?

2 ARE THE INPUT POWER SIDE OF 1, 2, 3, 4, 5, 6 PIN OF IC 17 NORMAL?
FOR 6 PIN, CHECK ALSO 4, 5 PIN OF IC 30.

3 BUFFER FOR ADDRESS BUS OF IC 3, 4, 14 FAULTY.

3. COLOR FAULTY

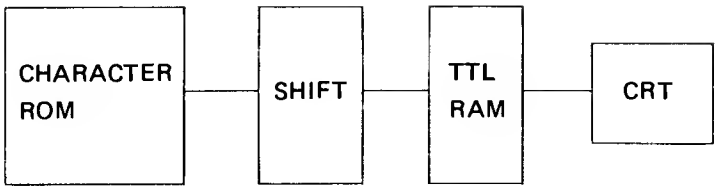

1. COLOR HORIZONTAL LINE APPEARS.

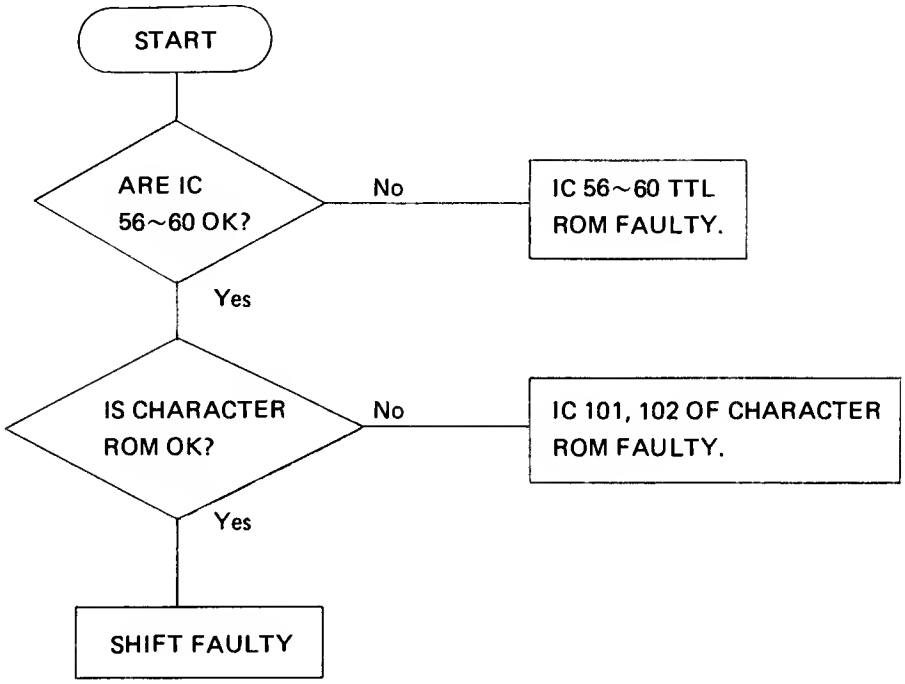

1 MANY TEMPERATURE FAULTY IN TTL-ROM OF IC 56, 57, 58, 59, 60.

2 FAULTY OF EITHER CHARACTER ROM OR WEAK CONTACT OF SOCKET.

2. **WHEN THE COLOR IS LIGHT OR NO COLOR.**
   FAULTY OF IC 61 FUSE ROM 6331-1.

3. **THE WHOLE ENTIRE COLOR IS DIFFERENT.**

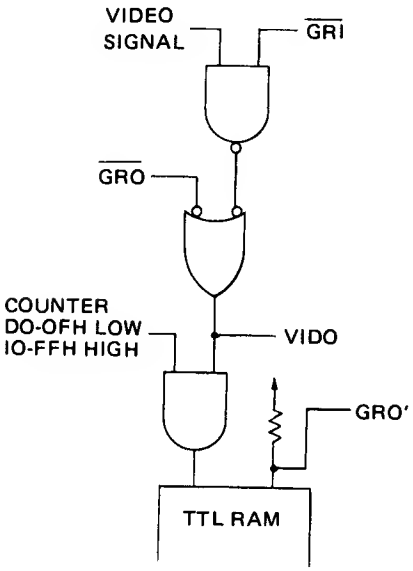

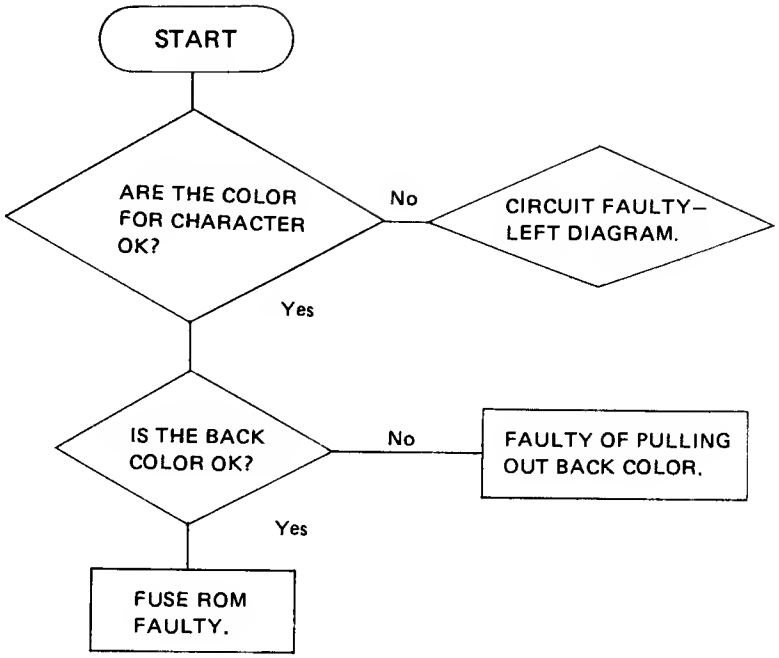

1 IN THIS CIRCUIT DIAGRAM, THE COLOR HAS ALREADY BEEN DECIDED FOR THE CHARACTERS.
FOLLOW THE SIGNAL LINES CAREFULLY.
THESE ARE THE SIGNAL LINES FROM THE RESULT OF GATES DESTROYED.

2 PULLING OUT OF BACK COLOR CAN BE DONE THROUGH IC 92, 82.

4. VIDEO FAULTY

1. PICTURE MOSAIC

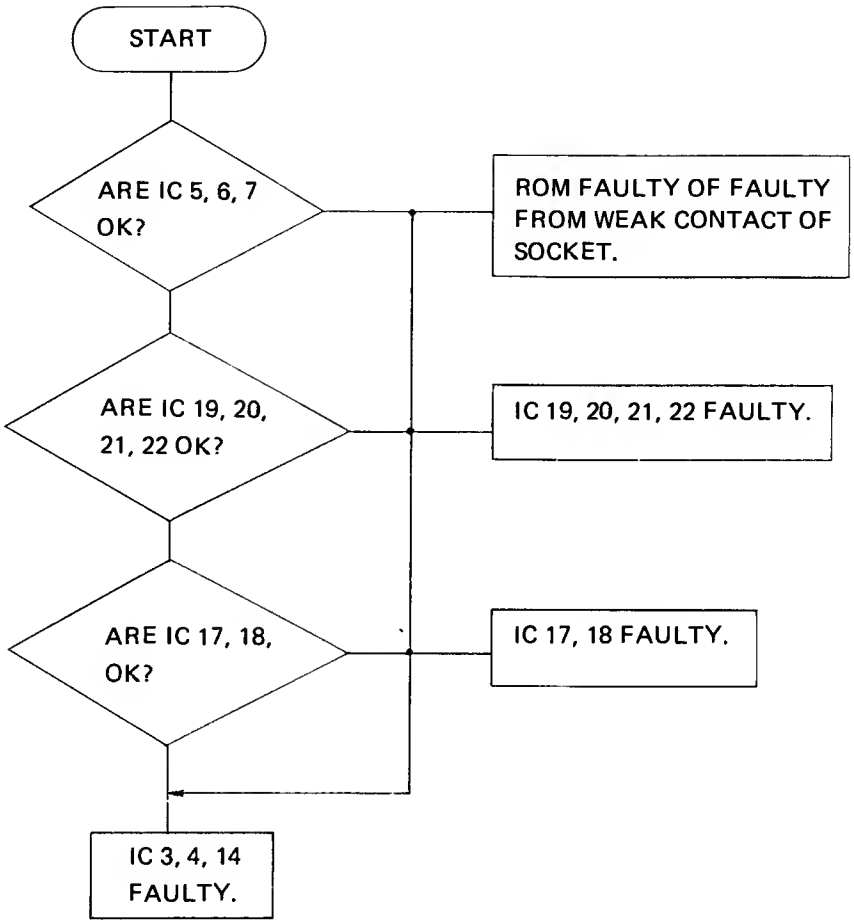

1 2 IS CHIP SELECT WORKING PROPERLY?
IS THE ADDRESS DATA BUS NORMAL?

3 ARE THE INPUT/OUTPUT POWER OF DECODE NORMAL?
FOR 6 PIN, CHECK ON 4, 5 PIN OF IC 30.

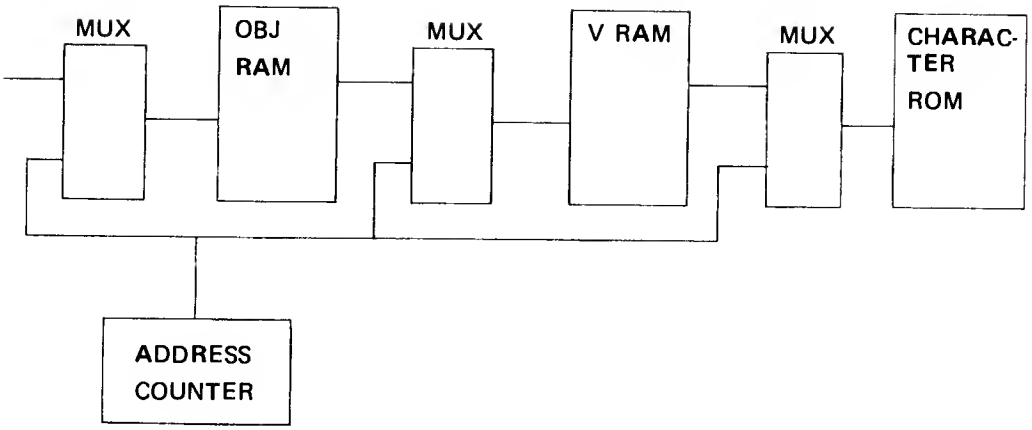

2. THE SCREEN IS SHOWN HORIZONTALLY DOUBLED & TRIPLED.
   - V RAM OF MUX – SURROUNDING (CIRCUMFERENCE)
     IC 76, 87, 97, 98, 99
   - CHARACTER ROM – SURROUNDING (CIRCUMFERENCE)

3. THE SCREEN IS SHOWN VERTICALLY DOUBLED, TRIPLED ..... ETC.
   - INVERSION FAULTY IC 70, 80

4. WORDS APPEAR ON SCREEN.
   - OFF-TIMING OF V RAM. IC 74, 75.

5. INVERSION FAULTY OF WORDS FOR 2 PLAYERS.
   - IC 42, 43, 61, 70, 81.

6. OFF-POSITIONING OF CHARACTER OR WHEN CHARACTER (SUCH AS FROGS) DO NOT APPEAR.
   - ADDRESS BUS WORKING FROM OBJ-RAM TO TTL ROM FAULTY.
     IC 37, 47, 48, 49.

7. CHARACTER TURNS INTO NUMBER.
   - ADDRESS COUNTER OF TTL RAM FAULTY.
     IC 37, 49.
   - OFF-TIMING (V) FAULTY OF V RAM.
     IC 76, 77.

8. TURNS INTO MOSAIC AT TIMES WHEN SHIFTING THE CHARACTERS.
   - FAULTY OF DATA SELECTOR INSERTED IN CHARACTER ROM.
     IC 88, 89, 90.

834-0069 - TROUBLESHOOTING

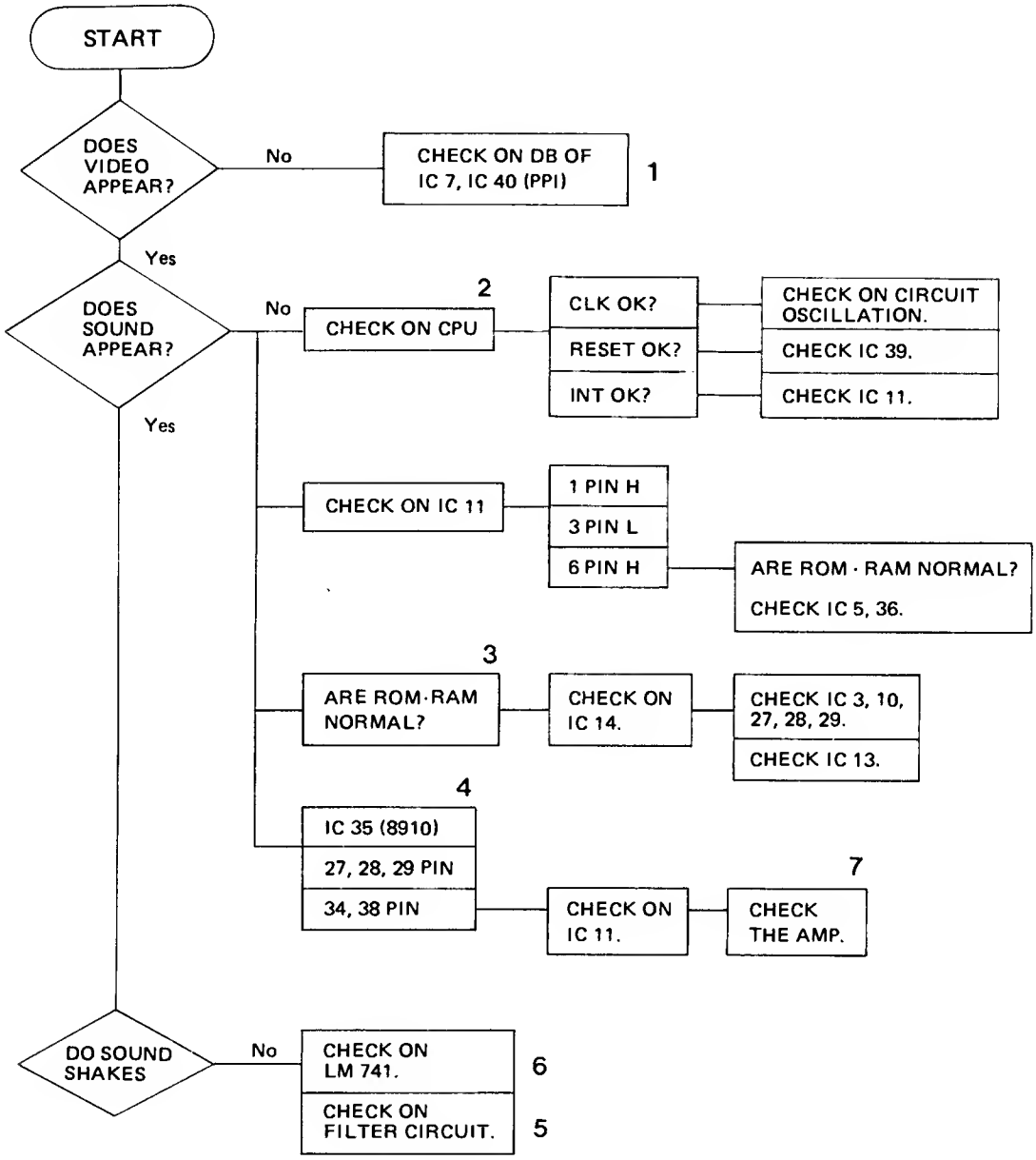

1. CHECK ON PPI
   - CHECK ON CHIP SELECTOR (6 PIN)
   - CHECK ON $\overline{RD}$ (5 PIN), $\overline{WR}$ (36 PIN)

2. CHECK ON CPU SURROUNDING
   - CHECK CLK ABOUT (APPROXIMATELY) 1.8MHz
   - CHECK ON CIRCUIT OSCILLATION
   - CHECK ON $\overline{RESET}$ L → H
     IC 39, 8, 9 PIN
   - CHECK ON $\overline{INT}$
     IC 11 1 PIN H
     3 PIN L
     6 PIN H
     CHECK IC 5, 36

3. CHECK ON ROM, RAM
   - CHECK ON CHIP SELECT ROM (20 PIN) RAM (8 PIN)
   - CHECK ON ACTION
   - CHECK THE ADDRESS DATA BUS.
   - CHECK THE I/O POWER OF IC 3, 10, 27, 28, 29

4. CHECK ON P.S.G. (8910)
   - CHECK CLK (22 PIN) ABOUT (APPROXIMATELY) 1.8MHz
   - CHECK THE INPUT POWER OF 6, 7, 9, 10 PIN ON PORT B
   - CHECK BC1 (29 PIN) BC2 (28 PIN) BD1R SIGNAL
     BC1 → L BC2 → SIGNAL BD1R → SIGNAL
   - CHECK ANALOG (ANALOGUE) OUTPUT POWER CHA (3 PIN) CHB (4 PIN) CHC (38 PIN)
     CHA → SIGNAL CHB → SIGNAL

5. CHECK THE FILTER
   - HOW ABOUT THE JOINING CONDITION TO CAPACITOR RESISTANCE?
   - IS FILTER CONTROL OK?
     IC 18, 19, 20

6. CHECK THE ACTION TO LM741

7. CHECK M51516L
   - HOW ABOUT THE JOINING CONDITION TO CAPACITOR RESISTANCE?
   - CHECK THE ACTION OF 3 PIN (USUALLY HIGH)
     IS OUTPUT POWER OK? 8, 9 PIN

TOP ASSEMBLY DRAWING NUMBER 700-0066

ITEM NO.	PART NO.	QTY REQD.	DESCRIPTION
1	700-0051	1	Woodgrain Upright SEGA Game Assembly
2	800-3183	1	Frogger Assembly Kit

Top Assembly
700-0066

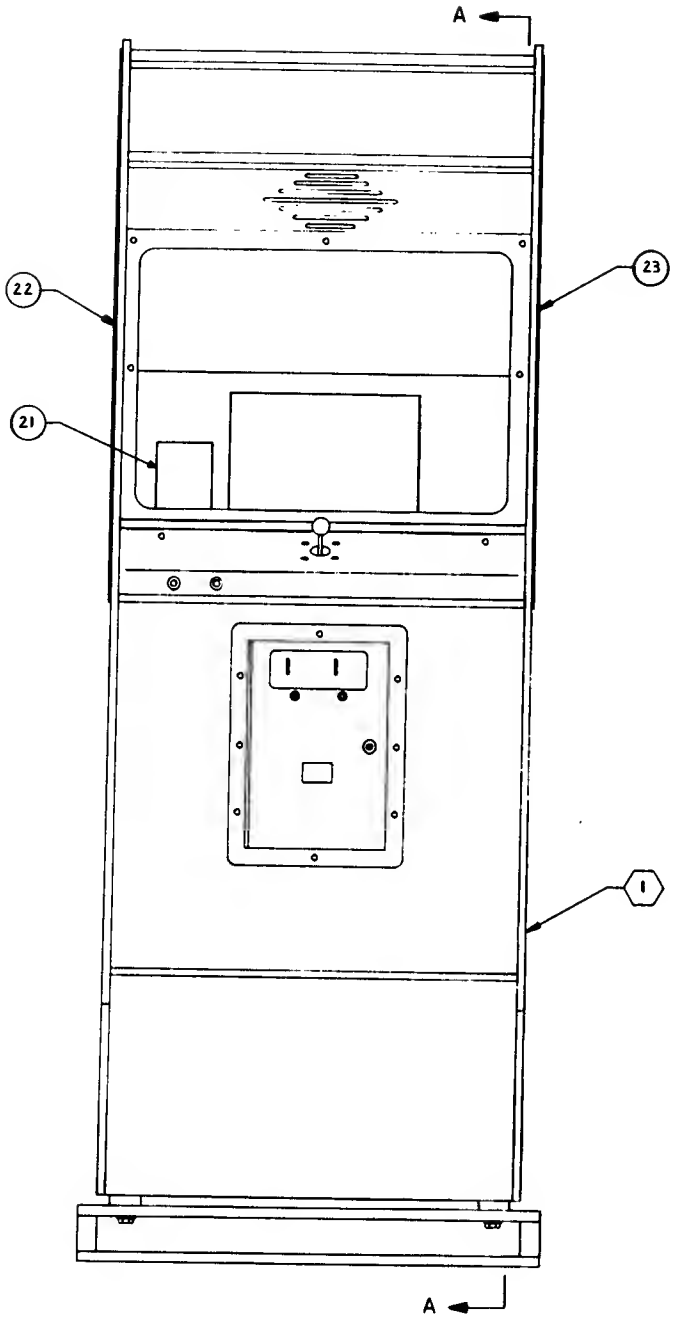

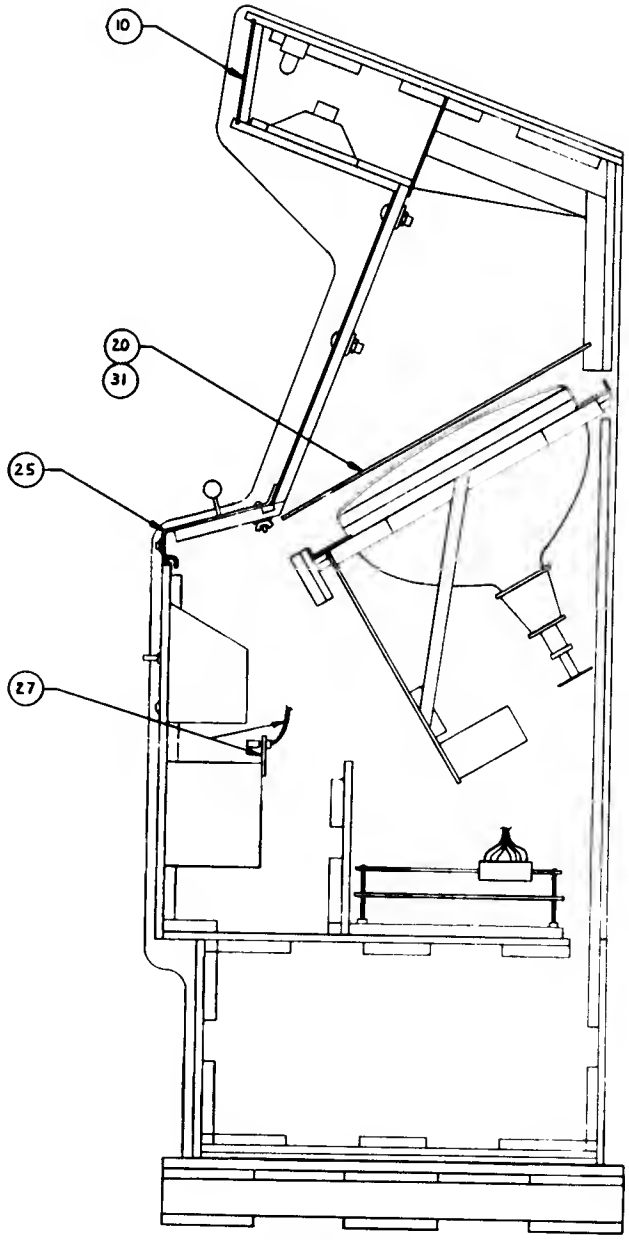

SECTION A - A

Top Assembly
700-0066

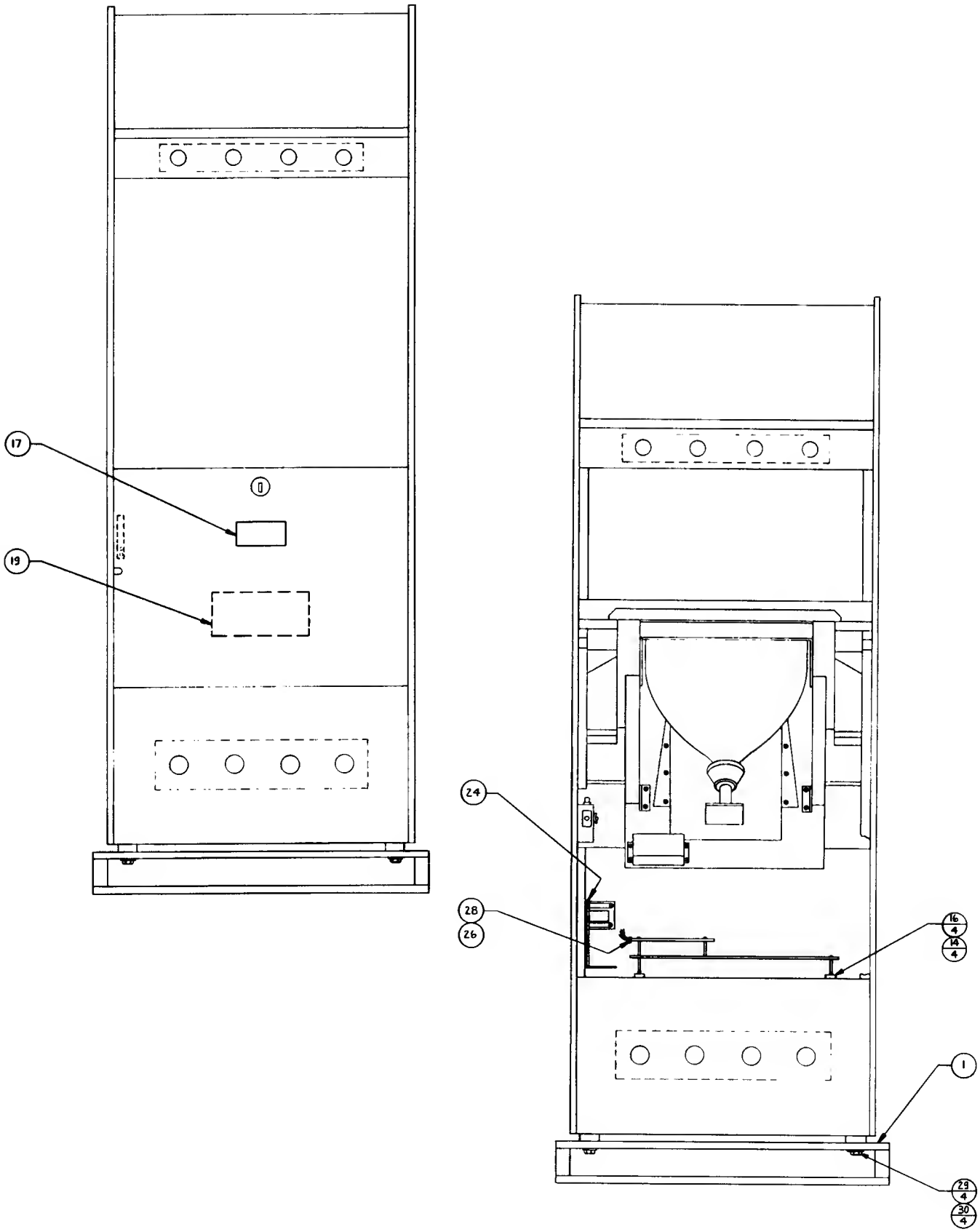

TOP ASSEMBLY

DRAWING NUMBER 700-0067

ITEM NO.	PART NO.	QTY REQD.	DESCRIPTION
1	700-0040	1	Woodgrain Upright Game Assembly
2	800-3182	1	Frogger Assembly Kit

Top Assembly
700-0067

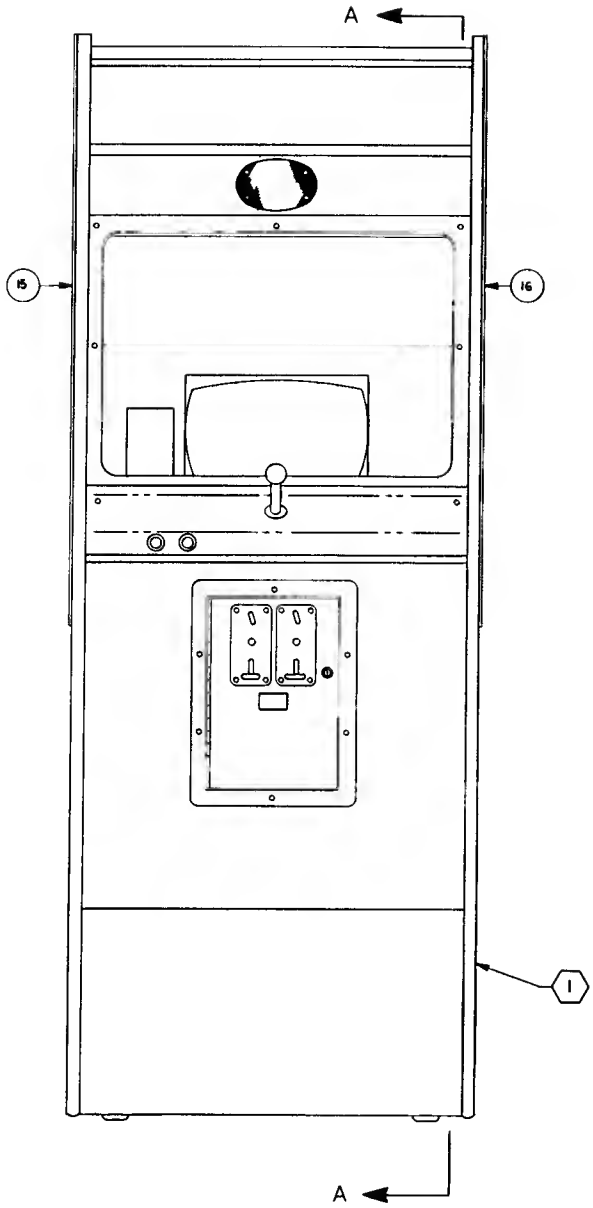

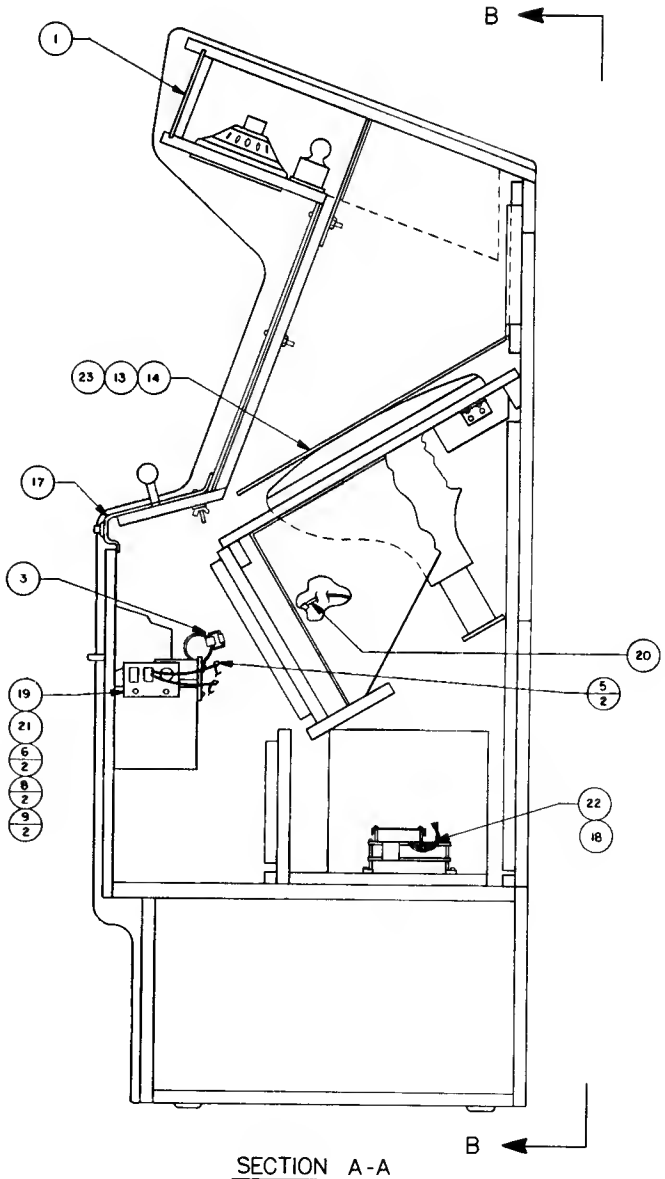

SECTION A-A

Top Assembly
700-0067

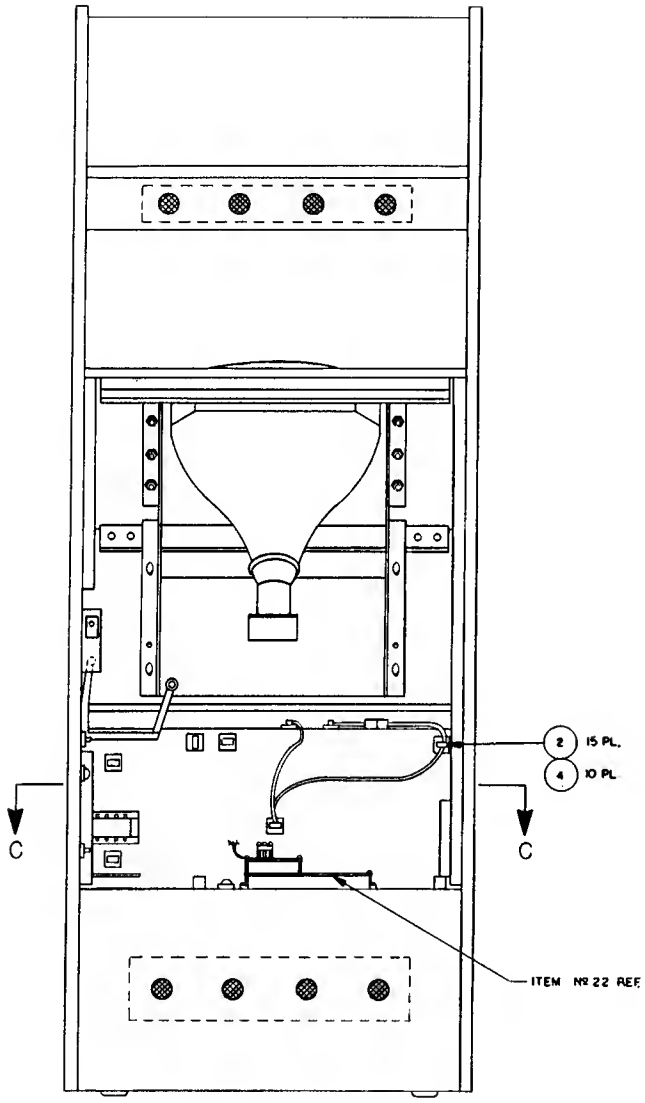

VIEW B-B
(W/ REAR PANEL AND DOOR REMOVED)

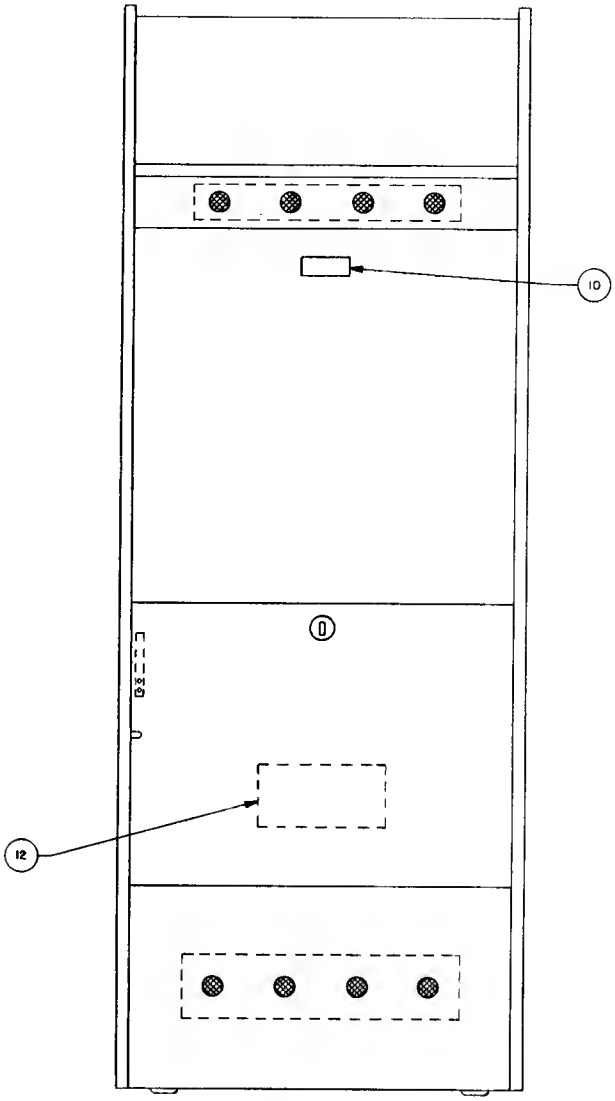

VIEW B-B

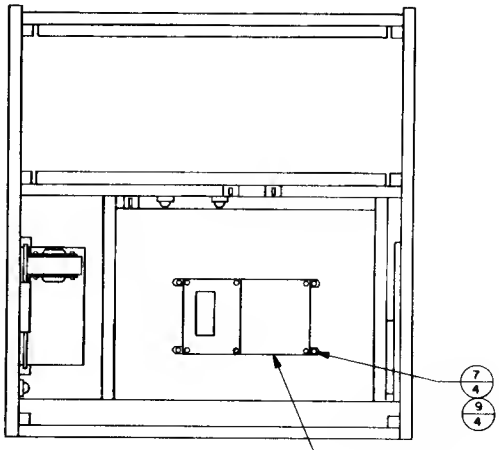

SECTION C-C

TOP ASSEMBLY DRAWING NUMBER 700-0068

ITEM NO.	PART NO.	QTY REQD.	DESCRIPTION
1	700-0022	1	White Upright Game Assembly
2	800-3187	1	Frogger Assembly Kit

Top Assembly
700-0068

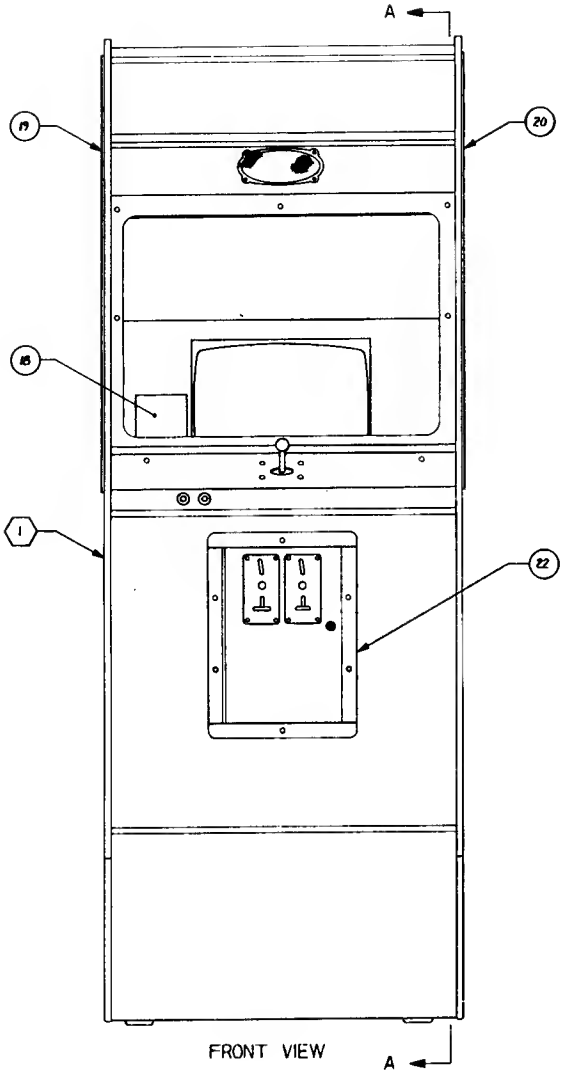

FRONT VIEW

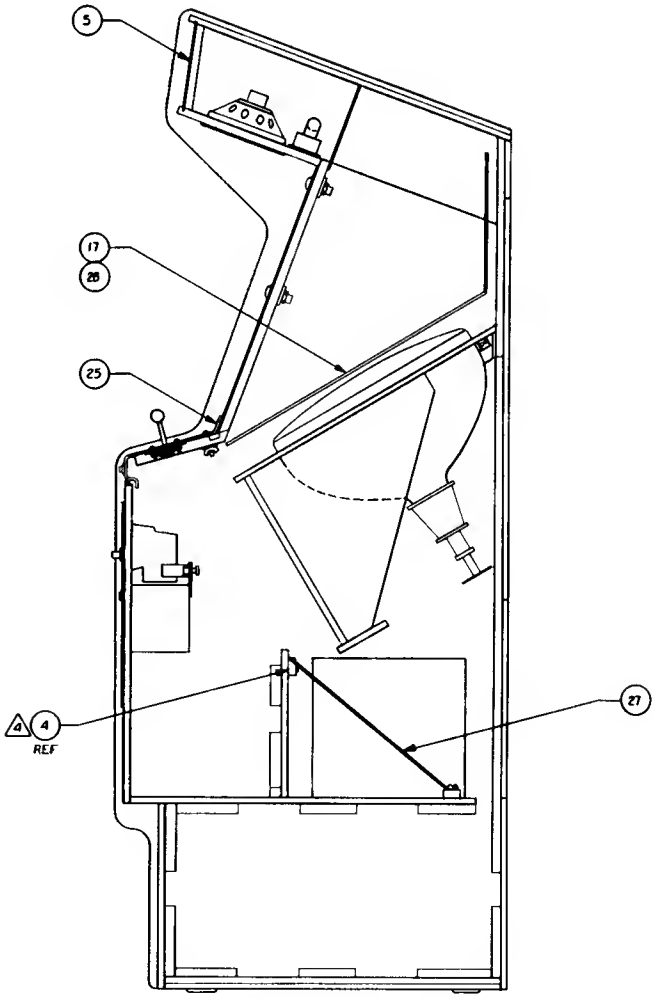

SECTION A-A

Top Assembly
700-0068

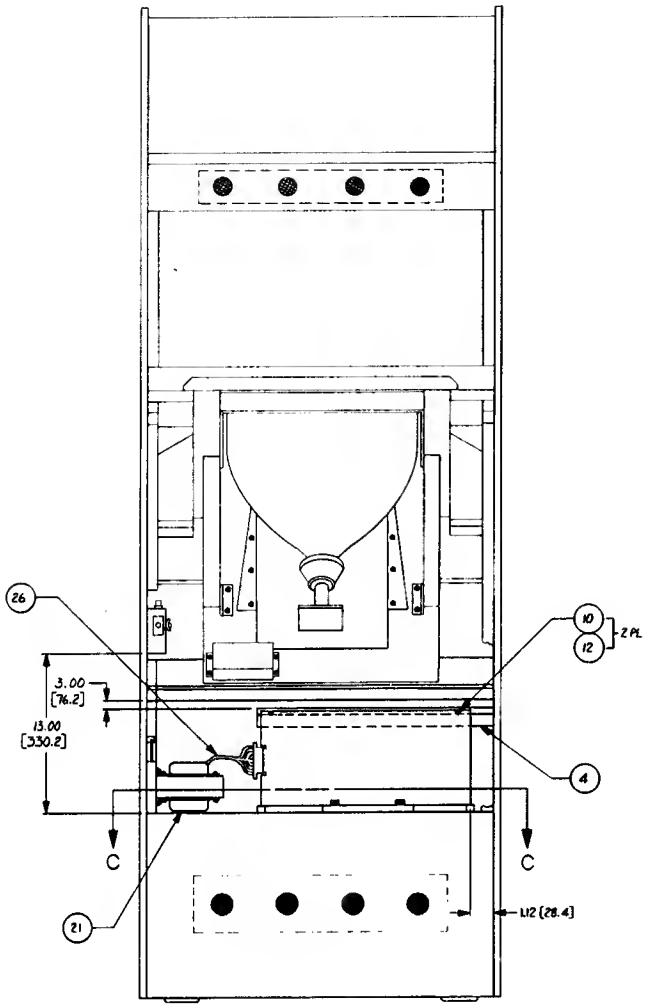

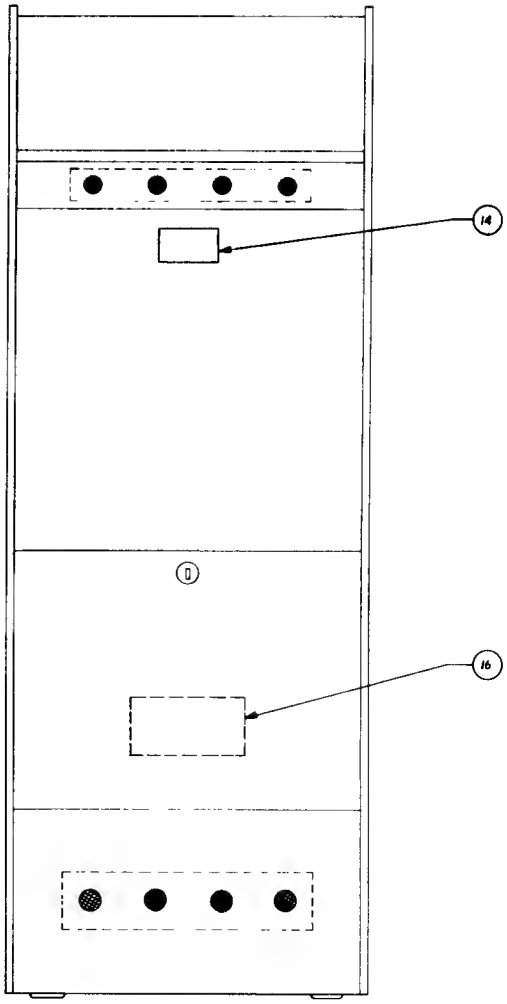

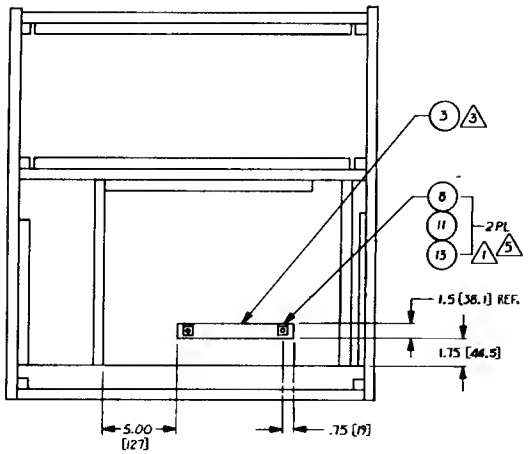

TOP ASSEMBLY DRAWING NUMBER 700-0069-00

TOP ASSEMBLY DRAWING NUMBER 700-0069-01

TOP ASSEMBLY DRAWING NUMBER 700-0069-02

ITEM NO.	PART NO.	QTY REQD. -00	-01	-02	DESCRIPTION
1	130-0001	1	--	--	Speaker, 6 x 9
2	130-0002	1	--	--	Speaker Cover, 6 x 9
3	140-0021	1	--	--	Junction Box Cover
4	140-0049	1	--	--	Basic Upright Cabinet
5	250-0032	1	--	--	Front Bezel
6	250-0034	1	--	--	Spring Retainer
7	250-0038	1	--	--	Moulding Strip
8	250-0048	1	--	--	Clip Switch
9	250-0356	2	--	--	Color Monitor Support Bracket
10	253-0104	1	--	--	Panel Monitor
11	252-0092	1	1	--	PCB Support
12	252-0097	1	1	--	Electronics Mounting Block
13	253-0234	1	--	--	Logo Panel
14	280-0005	10	--	--	Cable Tie
15	280-0004	2	--	--	Hold Down Clip Wire
16	280-0324	2	2	--	Nylon Cable Clamp
17	280-0327	10	--	--	Base Tie Wrap
18	281-0074-20	2	--	--	Flat Head Phillips Wood Screw, #8 x 1¼
19	420-0568	1	--	--	FCC Decal
20	420-0646	1	--	--	Frogger Box Decal
21	420-0647	1	--	--	Frogger Manual

TOP ASSEMBLY-Continued DRAWING NUMBER 700-0069-00

TOP ASSEMBLY-Continued DRAWING NUMBER 700-0069-01

TOP ASSEMBLY-Continued DRAWING NUMBER 700-0069-02

ITEM NO.	PART NO.	QTY REQD. -00	-01	-02	DESCRIPTION
22	420-0648	1	--	--	Frogger Interior Graphic
23	420-0652	1	--	--	Game Electronics Decal
24	420-0663	1	--	--	Frogger Left Side Graphic
25	420-0664	1	--	--	Frogger Right Side Graphic
26	800-0130	1	--	--	Power Transformer Assembly
27	800-3181	1	--	--	Control Panel Assembly
28	800-3189	1	--	--	Frogger Master Harness Assembly
29	834-0084	1	--	--	Frogger Game Electronics Assembly
30	281-0014-28	4	--	--	Oval Head Phillips Machine Screw,#8-32x13/4
31	281-0042-06	2	2	--	Pan Head Phillips Screw, #6 x 3/8 S/M
32	281-0044-08	12	2	--	Pan Head Phillips Screw, #8 x 1/2 S/M
33	281-0044-12	2	--	--	Pan Head Phillips Screw, #8 x 3/4 S/M
34	281-0044-20	4	--	--	Pan Head Phillips Screw, #8 x 1¼ S/M
35	281-0045-12	2	--	--	Pan Head Phillips Screw, #10 x 3/4 S/M
36	282-0005-20	6	--	--	Carriage Bolt, #10-24 x 1¼ Large
37	282-0005-32	8	--	--	Carriage Bolt, #10-24 x 2 Large
38	283-0015-00	4	--	--	Wing Nut, #10-24
39	283-0024-00	4	--	--	Hex Nut, #8-32
40	283-0025-00	11	--	--	Hex Nut, #10-24
41	284-0002-00	2	2	--	Flat Washer, #6
42	284-0004-00	20	2	--	Flat Washer, #8

TOP ASSEMBLY-Continued DRAWING NUMBER 700-0069-00

TOP ASSEMBLY-Continued DRAWING NUMBER 700-0069-01

TOP ASSEMBLY-Continued DRAWING NUMBER 700-0069-02

ITEM NO.	PART NO.	QTY REQD. -00	-01	-02	DESCRIPTION
43	284-0006-00	16	--	--	Flat Washer, #10
44	284-0034-00	16	--	--	Split Lock Washer, #8
45	284-0036-00	11	--	--	Split Lock Washer, #10
46	320-0020	.3ft	--	--	Sealant Foam
47	390-0019	1	--	--	Fluorescent Lamp
48	700-0051	--	1	--	Woodgrain Upright Game Assembly
49	734-0038	--	--	1	Upright Game Assembly
50	800-0029	1	--	--	20" Ground Strap Assembly
51	800-0135	1	--	--	Mechanical Coin Mechanism Assembly
52	800-0136	1	--	--	Speaker Harness Assembly
53	800-0140	1	--	--	19" Color Monitor Assembly
54	800-0145	1	--	--	Junction Box Assembly
55	800-0147	1	--	--	Fluorescent Lamp Assembly
56	800-3184	--	1	1	Frogger Assembly Kit
57	800-0205	1	--	--	Ground Strap Assembly
58	420-0507	1	--	--	Light Baffle
59	420-0030	1	--	--	Caution 115V Decal
60	252-0083	1	--	--	Power Supply Support Block
61	800-3191	1	--	--	Video Interface Harness Assembly
62	253-0241	1	--	--	19" CRT Mask

Top Assembly
700-0069

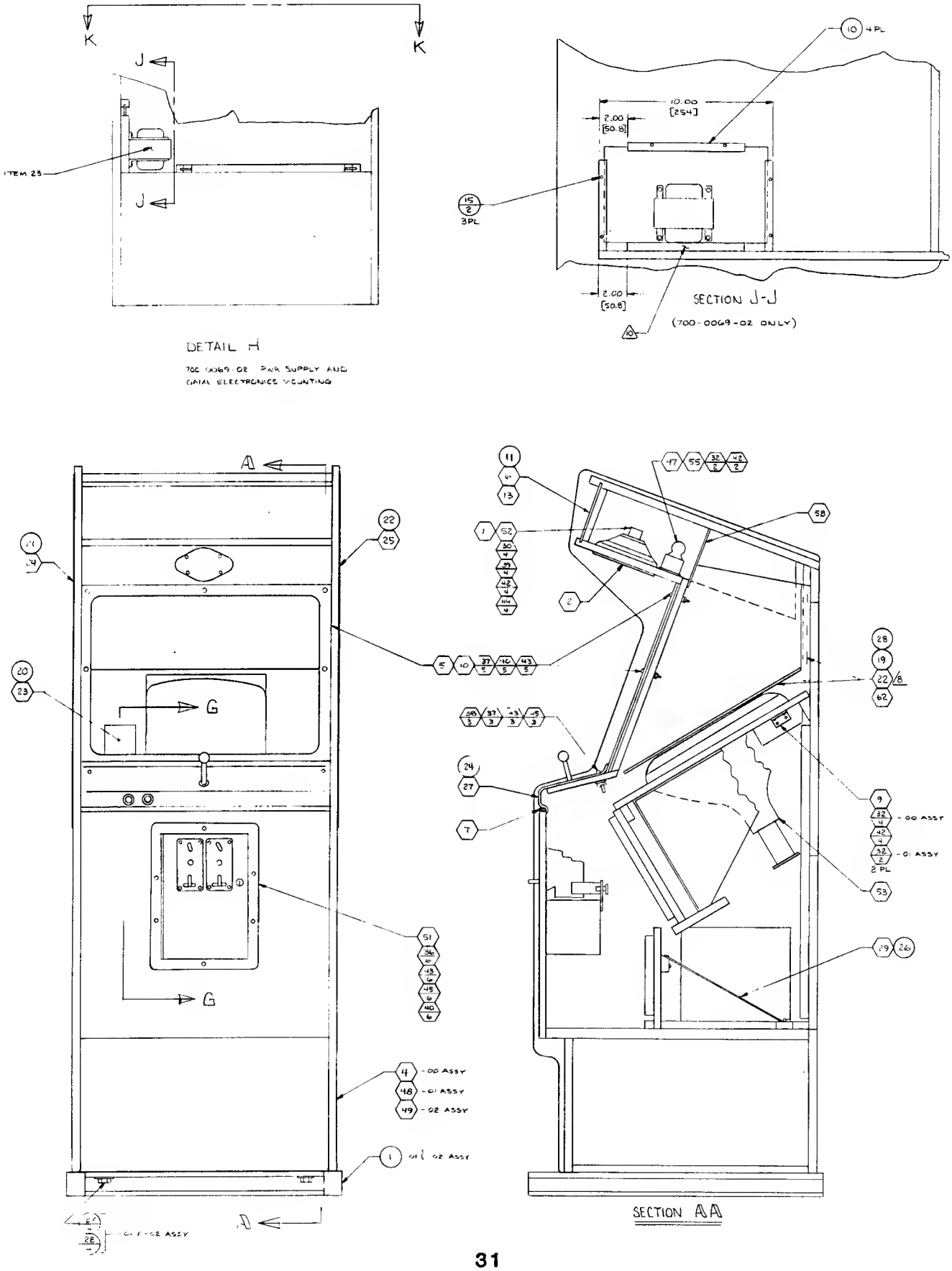

Top Assembly
700-0069

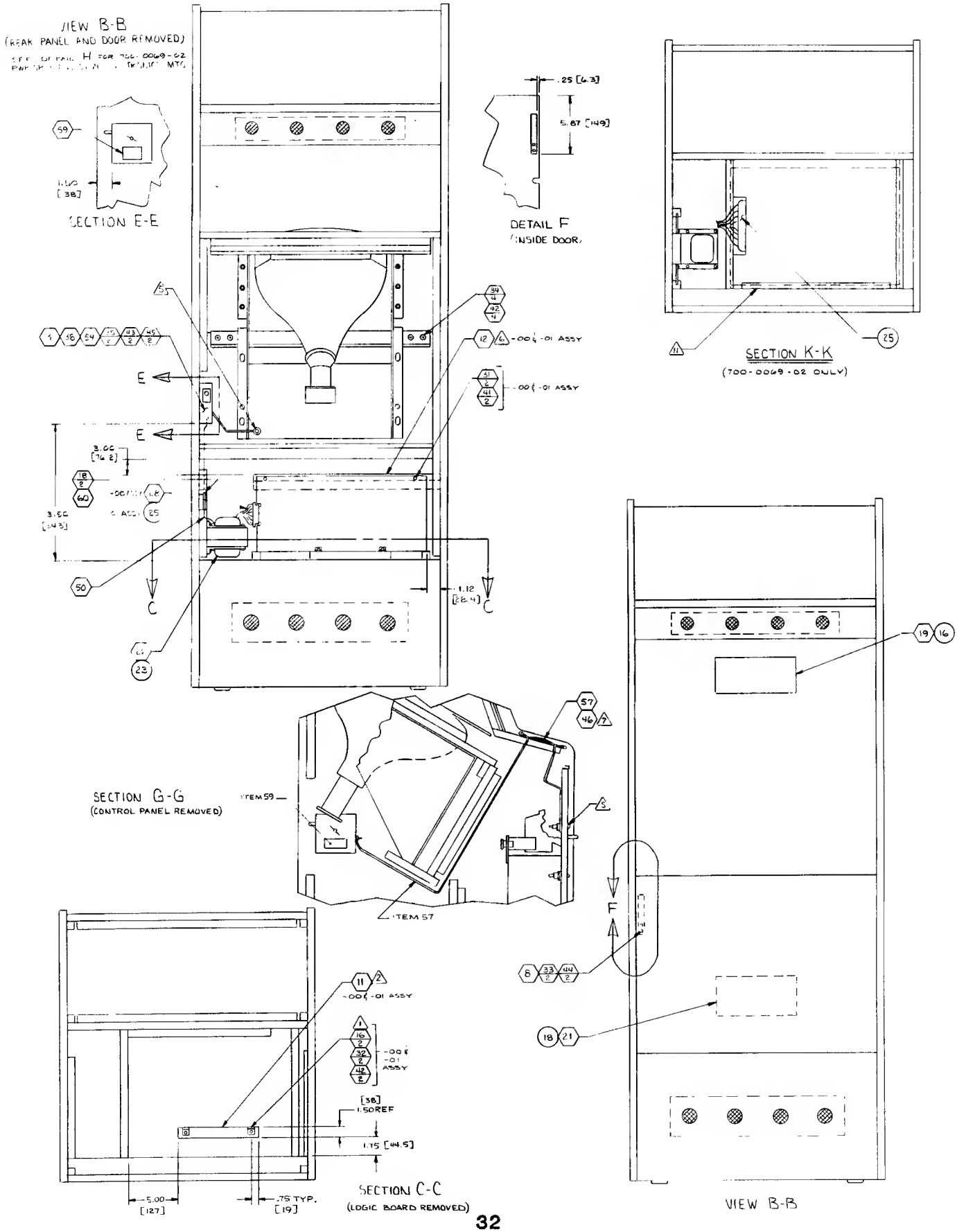

TOP ASSEMBLY DRAWING NUMBER 700-0070

ITEM NO.	PART NO.	QTY REQD.	DESCRIPTION
1	130-0001	1	Speaker, 6 x 9
2	130-0002	1	Speaker Cover
3			
4	140-0021	1	Junction Box Cover
5	140-0049	1	Basic Upright Cabinet
6			
7	250-0032	1	Front Bezel
8	250-0034	1	Spring Retainer
9	250-0038	1	Molding Strip
10	250-0048	1	Clip Switch
11	250-0356	2	Color Monitor Support Bracket
12			
13	252-0083	1	Power Supply Support Block
14			
15	253-0104	1	Panel Monitor
16	253-0234	1	Logo Panel
17	253-0241	1	19" CRT Mask
18			
19	280-0004	2	Hold Down Wire Clip
20	280-0005	10	Cable Tie
21	280-0327	10	Base Tie Wrap
22			
23	281-0014-28	4	Oval Head Phillips Screw #8-32 x 1 3/4"
24	281-0042-12	4	Pan Head Phillips Sheet Metal Screw,#6 x 3/4

ITEM NO.	PART NO.	QTY REQD.	DESCRIPTION
25	281-0044-08	10	Pan Head Phillips Sheet Metal Screw,#8 x ½
26	281-0044-12	2	Pan Head Phillips Sheet Metal Screw,#8 x 3/4
27	281-0044-20	4	Pan Head Phillips Sheet Metal Screw,#8 x 1¼
28	281-0045-12	2	Pan Head Phillips Sheet Metal Screw,#10 x 3/4
29	281-0074-20	2	Flat Head Phillips Wood Screw, #8 x 1¼
30			
31	282-0005-20	6	Carriage Bolt, #10-24 x 1¼
32	282-0005-32	8	Carriage Bolt, #10-24 x 2
33			
34	283-0015-00	4	Wing Nut, #10
35	283-0024-00	4	Hex Nut, #8
36	283-0025-00	11	Hex Nut, #10
37			
38	284-0002-00	4	Flat Washer, #6
39	284-0004-00	18	Flat Washer, #8
40	284-0006-00	16	Flat Washer, #10
41	284-0034-00	6	Split Lock Washer, #8
42	284-0036-00	11	Split Lock Washer, #10
43			
44	320-0020	.3ft.	Sealant Foam
45			
46	390-0019	1	Fluorescent Lamp
47			
48	420-0030	1	Caution 115V Decal

ITEM NO.	PART NO.	QTR REQD.	DESCRIPTION
49	420-0507	1	Light Baffle
50	420-0568	1	FCC Decal
51	420-0646	1	Frogger Box Decal
52	420-0647	1	Frogger Manual
53	420-0648	1	Interior Graphic
54	420-0652	1	Game Instruction Decal
55	420-0663	1	Frogger Left Side Graphic
56	420-0664	1	Frogger Right Side Graphic
57			
58	800-0029	1	20" Ground Strap Assembly
59	800-0136	1	Speaker Harness Assembly
60	800-0140	1	19" Color Monitor Assembly
61	800-0145	1	Junction Box Assembly
62	800-0146	1	Isolated Game Power Supply Assembly
63	800-0147	1	Fluorescent Lamp Assembly
64			
65	800-0205	1	Ground Strap Assembly
66			
67	800-3181	1	Control Panel Assembly
68	800-3188	1	Master Harness Assembly
69	800-3191	1	Video Interface Harness Assembly
70	800-3195	1	Coin System Assembly
71			
72	834-0086	1	Game Electronics Assembly

Top Assembly
700-0070

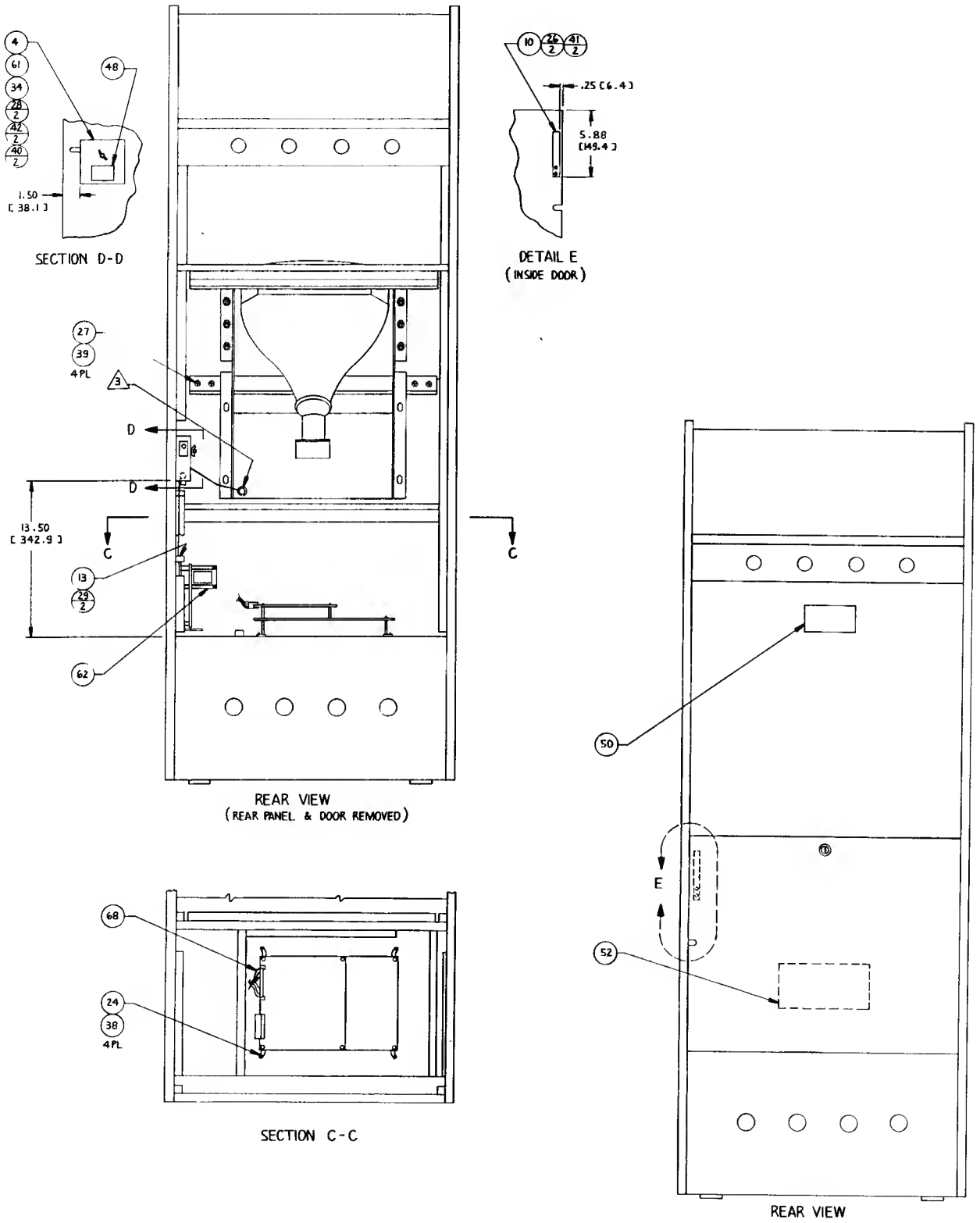

Top Assembly
700-0070

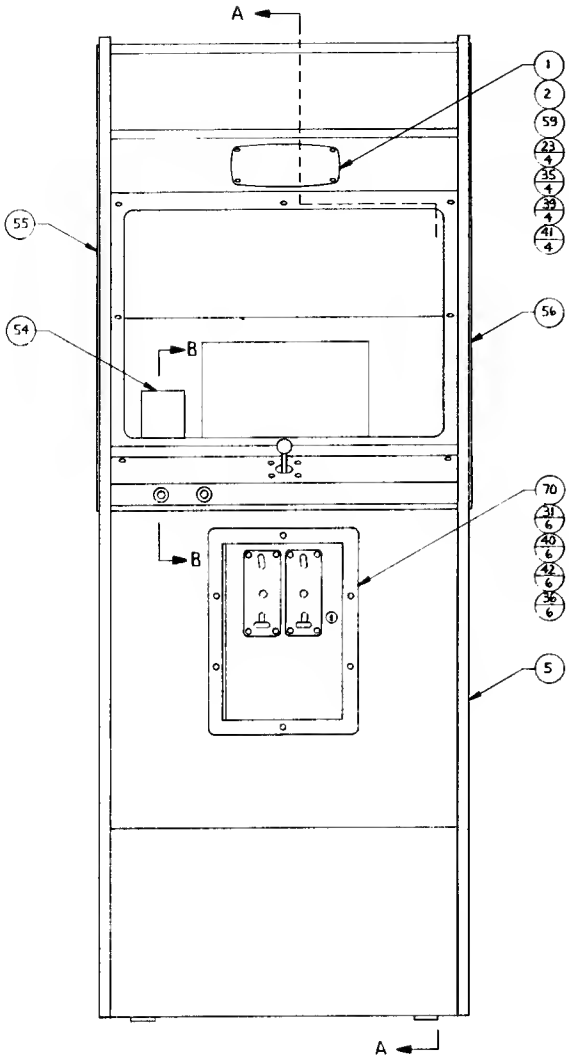

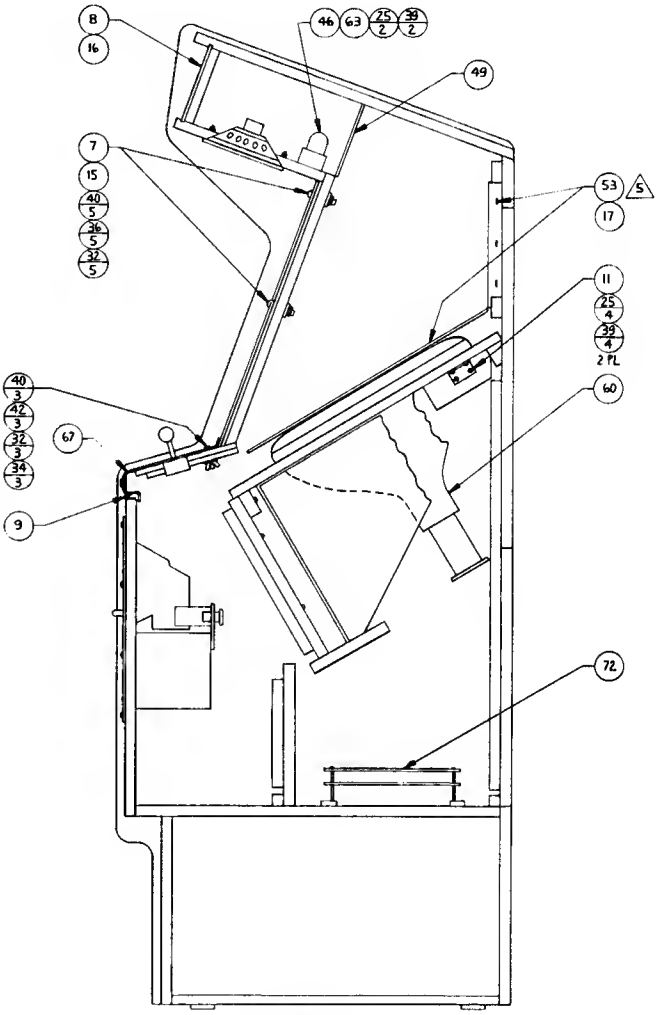

SECTION A - A

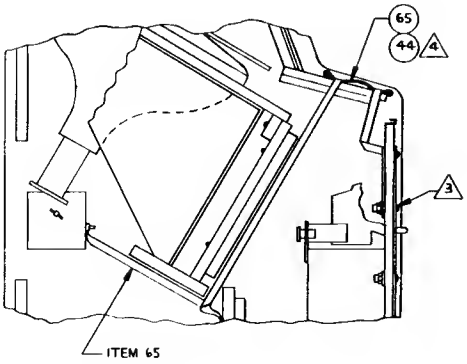

SECTION B - B
(CONTROL PANEL REMOVED)

TOP ASSEMBLY DRAWING NUMBER 700-0073

ITEM NO.	PART NO.	QTY. REQ'D	DESCRIPTION
1	130-0020	1	Speaker, 6 X 9, 10W
2	130-0002	1	Speaker Cover
3			
4	140-0021	1	Cover J - Box
5	140-0049	1	Basic Cabinet UPR.
6			
7	250-0032	1	Front Bezel
8	250-0034	1	Spring Retainer
9	250-0038	1	Molding Strip
10	250-0048	1	Clip Switch
11	250-0356	2	Bracket Clr. Mon. Support
12			
13			
14			
15	253-0104	1	Panel Monitor
16	253-0234	1	Panel Logo
17			
18			
19	280-0004	2	Clip Wire Hold Down
20	280-0005	10	Cable Tie
21	280-0327	10	Base Tie Wrap
22			
23	281-0014-28	4	SCR Oval Hd Phil #8-32 X 1 3/4"
24	281-0042-12	4	SCR Phil PN HD #6 X 3/4" SHT MTL
25	281-0044-08	10	SCR Phil PN HD #8 X 1/2" SHT MTL

TOP ASSEMBLY DRAWING NUMBER 700-0073

ITEM NO.	PART NO.	QTY. REQ'D	DESCRIPTION
26	281-0044-12	2	SCR Phil PN HD #8 X 3/4" SHT MTL
27	281-0044-20	4	SCR Phil PN HD #8 X 1 1/4" SHT MTL
28	281-0045-12	6	SCR Phil PN HD #10 X 3/4" SHT MTL
29			
30			
31	282-0005-20	6	Bolt Carriage #10-24 X 1 1/4"
32	282-0005-32	8	Bolt Carriage #10-24 X 2"
33			
34	283-0015-00	4	Nut Wing #10
35	283-0024-00	4	Nut Hex #8
36	283-0025-00	11	Nut Hex #10
37			
38	284-0002-00	4	Washer Flt #6
39	284-0004-00	18	Washer Flt #8
40	284-0006-00	20	Washer Flt #10
41	284-0034-00	10	Washer Lock Split #8
42	284-0036-00	15	Washer Lock Split #10
43			
44	320-0020	.3FT	Sealant Foam
45			
46	390-0019	1	Lamp Fluor
47			
48	420-0030	1	Decal Caution 115V
49	420-0507	1	Light Baffle

TOP ASSEMBLY DRAWING NUMBER 700-0073

ITEM NO.	PART NO.	QTY. REQ'D	DESCRIPTION
50	420-0568	1	Decal FCC
51	420-0646	1	Box Decal Frogger
52	420-0647	1	Manual Frogger
53	420-0648	1	Graphic Interior
54	420-0652	1	Decal Game Instruction
55			
56			
57			
58	800-0153	1	Assy GND Strap 18"
59	800-0136	1	Assy Speaker Harn
60	800-0140	1	Assy Clr Monitor 19"
61	800-0311	1	Assy J - Box F
62	800-0312	1	Assy Game Pwr Supply Mod.
63	800-0147	1	Assy Fluor Lamp 2
64			
65	800-0205	1	Assy GND Strap
66			
67	800-3181	1	Assy Control Panel Complete
68	800-3188	1	Assy Harn Master Frogger
69	800-3191	1	Assy Harn Video Interface
70	800-3195	1	Assy Coin System
71	211-0055	1	Conn Chassis Wafer Mount
72	834-0086	1	Assy Game Electronics Frogger

Top Assembly
700-0073

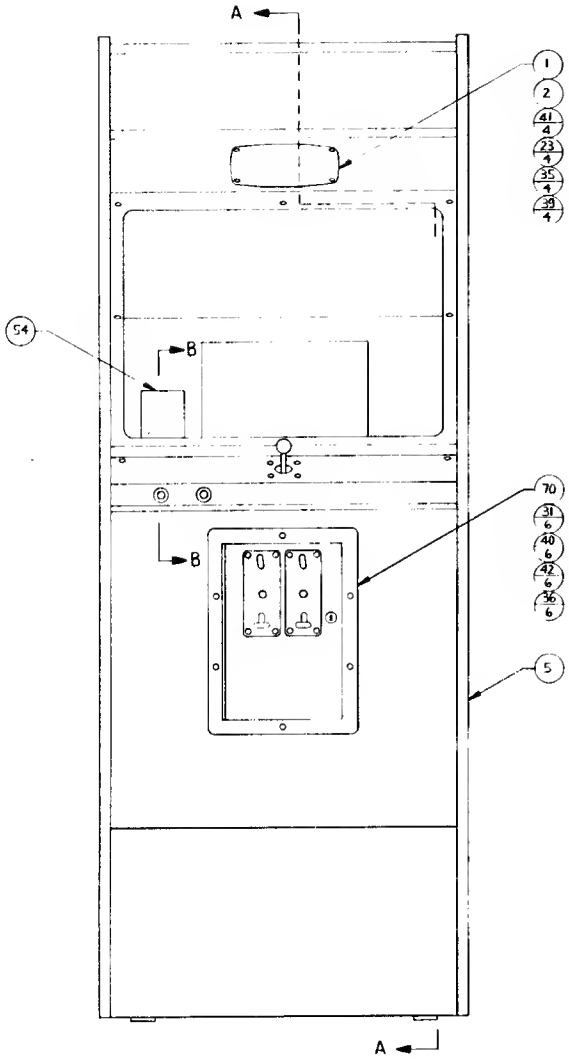

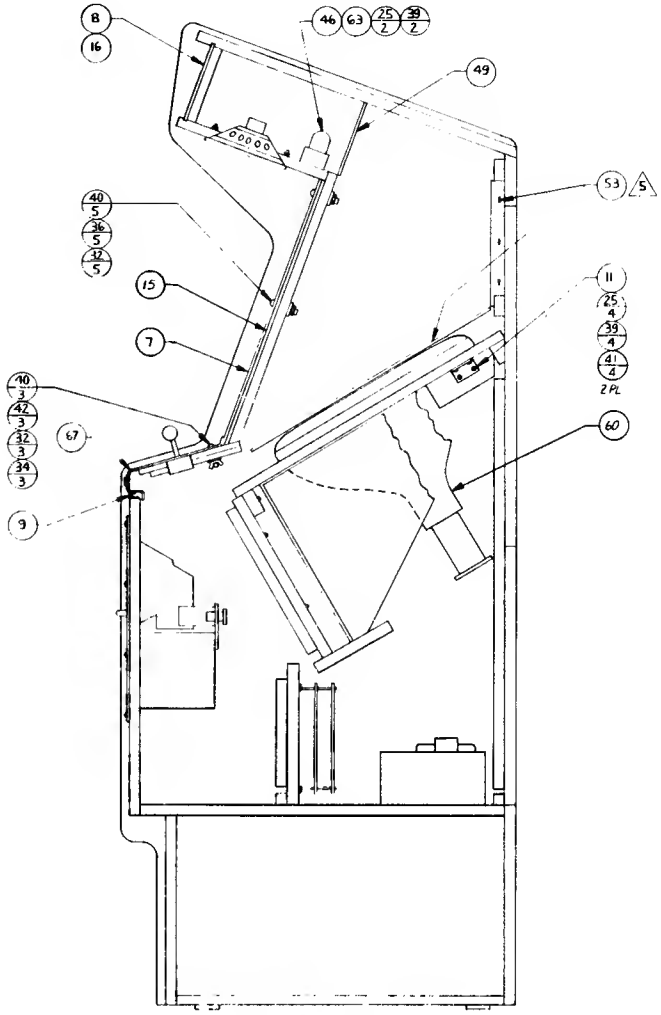

SECTION A - A

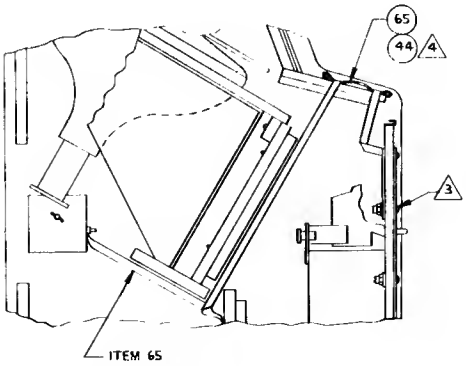

SECTION B - B
(CONTROL PANEL REMOVED)

Top Assembly
700-0073

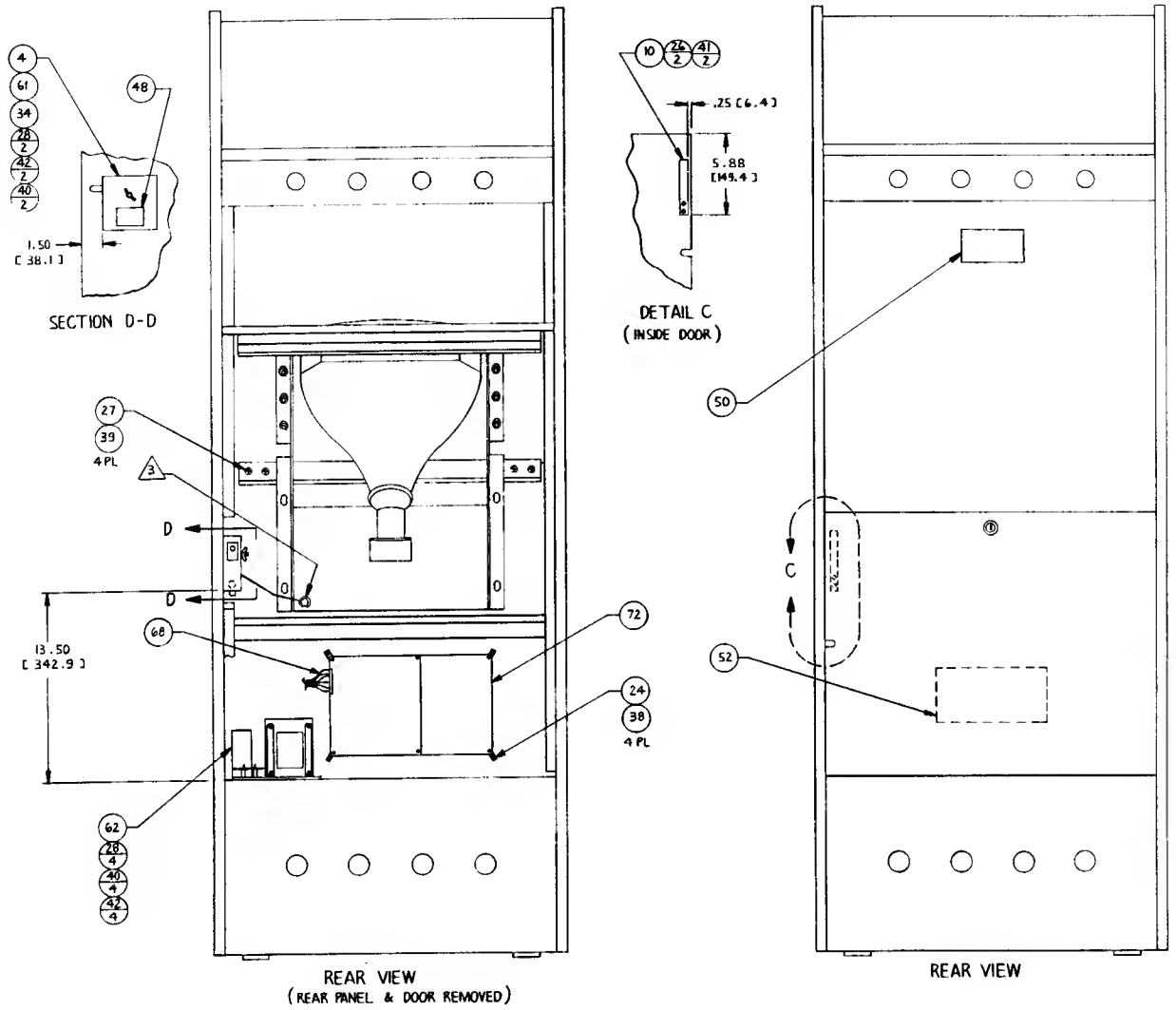

FROGGER ASSEMBLY KIT DRAWING NUMBER 800-3182

ITEM NO.	PART NO.	QTY REQD.	DESCRIPTION
1	253-0234	1	Frogger Logo Panel
2	280-0005	15	Cable Tie
3	280-0323	1	Electric Tap Splice
4	280-0327	10	Base Tie Wrap
5	280-0362	2	Electric Crimp Sleeve
6	281-0002-06	2	Pin Head Phillips Machine Screw, #6 x 3/8
7	281-0042-12	4	Pin Head Phillips Screw, S/M, #6 x 3/4
8	283-0022-00	2	Hex Nut, #6
9	284-0002-00	6	Flat Washer, #6
10	420-0568	1	FCC Decal
11	420-0646	1	Frogger Box Decal
12	420-0647	1	Frogger Manual
13	420-0648	1	Frogger Interior Graphic
14	420-0652	1	Game Instructions Decal
15	420-0663	1	Frogger Woodgrain Left Side Graphic
16	420-0664	1	Frogger Woodgrain Right Side Graphic
17	800-3181	1	Frogger Control Panel Assembly
18	800-3188	1	Master Harness Assembly
19	800-3190	1	Volume Control Bracket Assembly
20	800-3191	1	Video Interface Harness Assembly
21	800-3192	1	Volume Control Assembly

ITEM NO.	PART NO.	QTY REQD.	DESCRIPTION
22	834-0086	1	Frogger Game Electronics Assembly
23	253-0241	1	19" CRT Mask

FROGGER ASSEMBLY KIT DRAWING NUMBER 800-3183

ITEM NO.	PART NO.	QTY REQD.	DESCRIPTION
1	140-0058	1	SEGA Game Pallet
2			
3	211-0038	2	Female Quick Connector, 3/16
4	211-0041	13	Connector Pin AMP
5			
6	211-0044	1	2-Pin Connector Cap AMP
7	211-0046	1	6-Pin Connector Cap AMP
8	211-0047	1	12-Pin Connector Cap AMP
9			
10	253-0234	1	Frogger Logo Panel
11	280-0005	15	Cable Tie
12	280-0327	10	Base Tie Wrap
13			
14	281-0042-12	4	Pin Head Phillips Screw, #6 x 3/4 S/M
15			
16	284-0002-00	4	Flat Washer, #6
17	420-0568	1	FCC Decal
18	420-0646	1	Frogger Box Decal
19	420-0647	1	Frogger Manual
20	420-0648	1	Frogger Interior Graphic
21	420-0652	1	Game Instructions Decal
22	420-0663	1	Frogger Woodgrain Left Side Graphic
23	420-0664	1	Frogger Woodgrain Right Side Graphic

ITEM NO.	PART NO.	QTY REQD.	DESCRIPTION
24	800-0146	1	Game Power Supply Assembly
25	800-3181	1	Control Panel Assembly
26	800-3188	1	Master Harness Assembly
27	800-3192	1	Volume Control Assembly
28	834-0086	1	Game Electronics Assembly
29	282-0019-32	4	Hex Head Bolt 3/8-16 x 2
30	284-0029-00	4	Fender Washer, 3/8
31	253-0241	1	19" CRT Mask

FROGGER ASSEMBLY KIT DRAWING NUMBER 800-3184

ITEM NO.	PART NO.	QTY REQD.	DESCRIPTION
1	140-0058	1	Game Pallet
2	211-0017	1	Quick Female Connector ¼
3	211-0047	1	12-Pin Cap Connector Amp
4	211-0038	2	Female Quick Connector 3/16
5	211-0041	23	Pin Amp Connector
6			
7	211-0044	1	2-Pin Cap Connector Amp
8	211-0046	1	6-Pin Cap Connector Amp
9	211-0060	1	3-Pin Cap Connector Amp
10	252-0083	4	Power Supply Support Block
11	253-0234	1	Logo Panel
12	280-0005	15	Cable Tie
13	280-0323	2	Electro Tap Splice Amp
14	280-0327	10	Base Tie Wrap
15	281-0074-20	6	Flat Head Phillips Wood Screw, #8 x 1¼
16	420-0568	1	FCC Decal
17	420-0646	1	Frogger Box Decal
18	420-0647	1	Frogger Manual
19	420-0648	1	Interior Graphic
20	420-0652	1	Game Instruction Decal
21	420-0663	1	Frogger Woodgrain Left Side Graphic
22	420-0664	1	Frogger Woodgrain Right Side Graphic
23	800-0130	1	Power Transformer Assembly
24	800-3181	1	Control Panel Assembly

ITEM NO.	PART NO.	QTY REQD.	DESCRIPTION
25	800-3189	1	Frogger Master Harness Assembly
26	834-0084	1	Frogger Game Electronics Assembly
27	284-0029-00	4	Fender Washer 3/8"
28	282-0019-32	4	Hex Head Bolt, 3/8-16 x 2
29	514-0001	1	2 Amp Slow Blow Fuse

FROGGER ASSEMBLY KIT DRAWING NUMBER 800-3187

ITEM NO.	PART NO.	QTY REQD.	DESCRIPTION
1	211-0041	4	Pin Connector Amp
2	211-0044	2	2-Pin Cap Connector Amp
3	252-0092	1	PCB Support
4	252-0097	1	Electronics Mounting Block
5	253-0234	1	Logo Panel
6	280-0005	15	Cable Tie
7	280-0323	2	Electro Tap Splice
8	280-0324	2	Cable Clamp
9	280-0327	10	Base Tie Wrap
10	281-0042-06	2	Pan Head Phillips Screw, #6 x 3/8 S/M
11	281-0044-08	2	Pan Head Phillips Screw, #8 x 1/2 S/M
12	284-0002-00	2	Flat Washer, #6
13	284-0004-00	2	Flat Washer, #8
14	420-0568	1	FCC Decal
15	420-0646	1	Frogger Box Decal
16	420-0647	1	Frogger Manual
17	420-0648	1	Interior Graphic
18	420-0652	1	Game Instruction Decal
19	420-0661	1	Frogger Left Side Graphic
20	420-0662	1	Frogger Right Side Graphic
21	800-0130	1	Power Transformer Assembly
22	800-0135	1	Mechanical Coin Mechanism Assembly
23	800-3191	1	Video Interface Harness Assembly
24	800-0159	1	Monitor Harness Assembly

ITEM NO.	PART NO.	QTY REQD.	DESCRIPTION
25	800-3181	1	Control Panel Assembly
26	800-3189	1	Frogger Master Harness Assembly
27	834-0084	1	Frogger Game Electronics Assembly
28	253-0241	1	19" CRT Mask

CONTROL PANEL ASSEMBLY DRAWING NUMBER 800-3181

ITEM NO.	PART NO.	QTY REQD.	DESCRIPTION
1	510-0059	1	4-Way Long Shaft Joystick
2		4	Carriage Bolt, #10-24 x .75 Long
3		4	Hex Nut, #10-24
4		4	Lock Washer, #10
5		4	Flat Washer, #10
6	280-0329	2	Hex Nut, Pal, ½-13
7	240-0111	2	Blue Button Plunger
8	253-0031	4	Switch Spacer
9	510-0023	2	Switch Assembly
10	253-0235	1	Control Panel Graphic
11	280-0005	4	Cable Tie
12	280-0327	2	Base Tie Wrap
13	250-0508	1	Subpanel Metal Weldment
14	800-0303	1	Control Panel Harness Assembly

Control Panel Assembly
800-3181

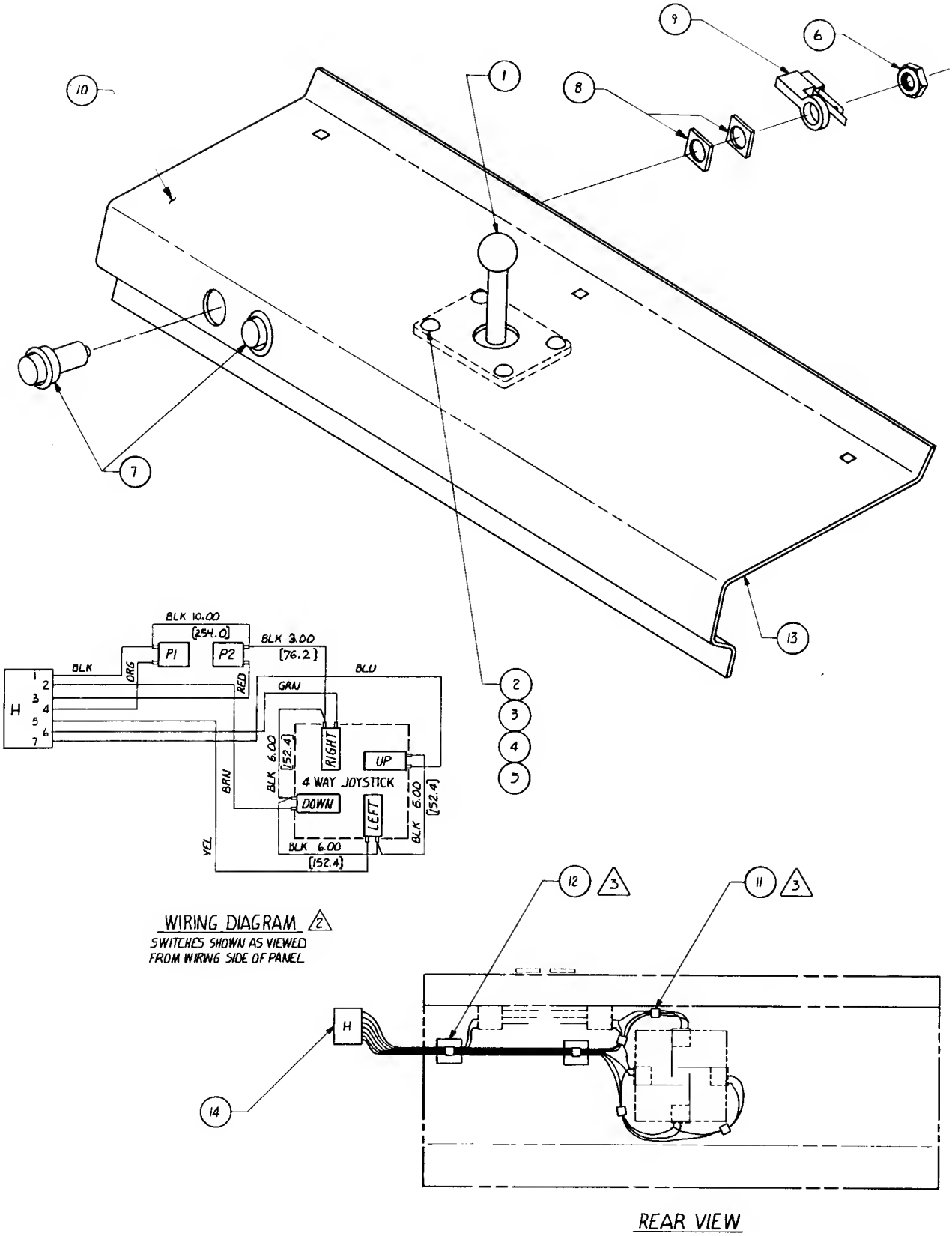

VOLUME CONTROL BLOCK ASSEMBLY DRAWING NUMBER 800-3031

ITEM NO.	PART NO.	QTY REQD.	DESCRIPTION
1	250-0068	1	Switch Bracket
2	475-0007	1	10K Panel Mount Pot
3	510-0051	2	Push Button Slide Switch
4	240-0001	1	Volume Control Knob
5	420-0395	1	Volume Control Decal
6		4	Aluminum Rivet 1/8"

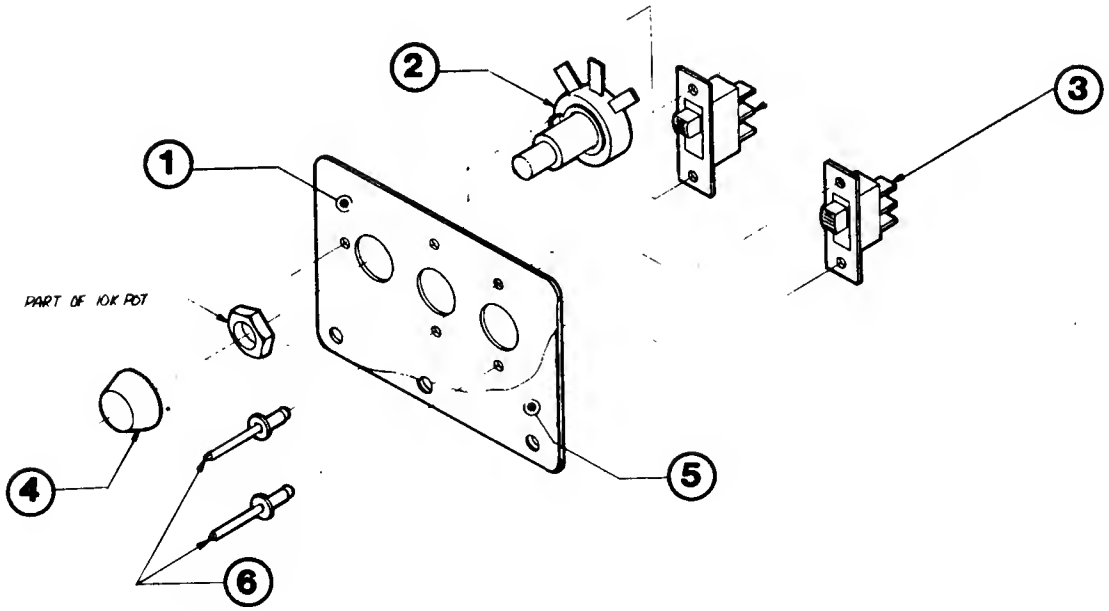

VOLUME CONTROL ASSEMBLY DRAWING NUMBER 800-3192

ITEM NO.	PART NO.	QTY REQD.	DESCRIPTION
1	475-0034	1	200 ohm Panel Mount Pot
2	600-0090	1	6-Pin Volume Socket and Cable Assembly

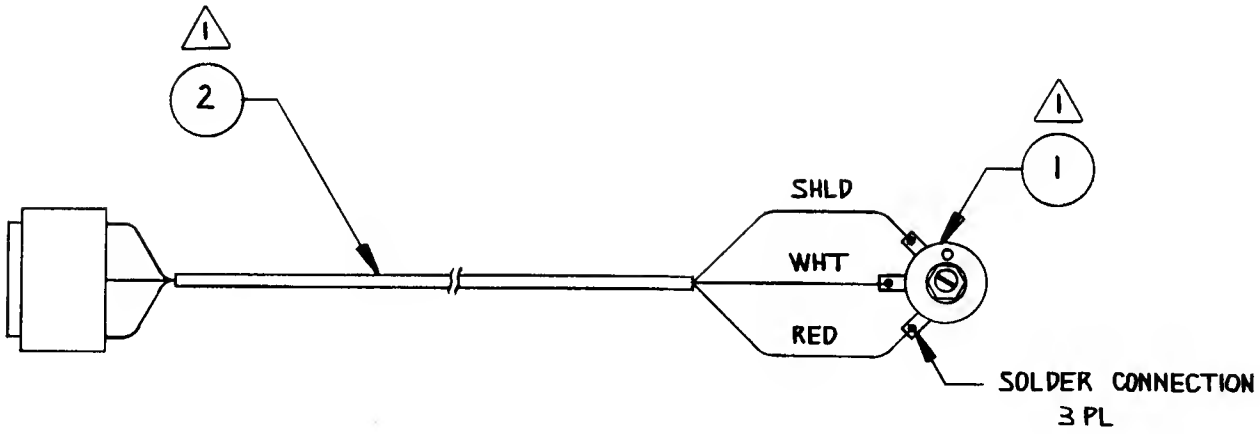

LINEAR POWER SUPPLY ASSEMBLY DRAWING NUMBER 800-0146

ITEM NO.	PART NO.	QTY REQD.	DESCRIPTION
1	211-0005	6	Crimp Lock Connector
2	211-0017	1	Quick Connector ¼"
3	211-0042	7	Connector Socket AMP
4	211-0059	1	3-Pin Plug Connector AMP
5	212-0016	1	10-Pin Female Connector
6	250-0433	1	Isolated Power Supply Heat Sink
7	250-0434	1	Isolated Power Supply Chassis
8	280-0005	4	Cable Tie
9	280-0014	6	Stand Off Clips
10	280-0117	1	Rivet Tab
11	560-0054	1	Isolated Transformer
12	800-0128	1	Game Power Supply PC Assembly
13		4	Pop Rivet 3/16
14		8	Pin Head Machine Screw, #4-40 x ¼
15		6	Sheet Metal Screw, #6 x ½
16		4	Flat Washer, #10
17		6	Transistor Insulator
18	211-0043	2	2-Pin Connector Plug AMP
19			
20	600-0079	1ft.	2 Condition Zip Cord
21	280-0359	2	Electric Crimp Sleeve

Linear Power Supply Assembly
800-0146

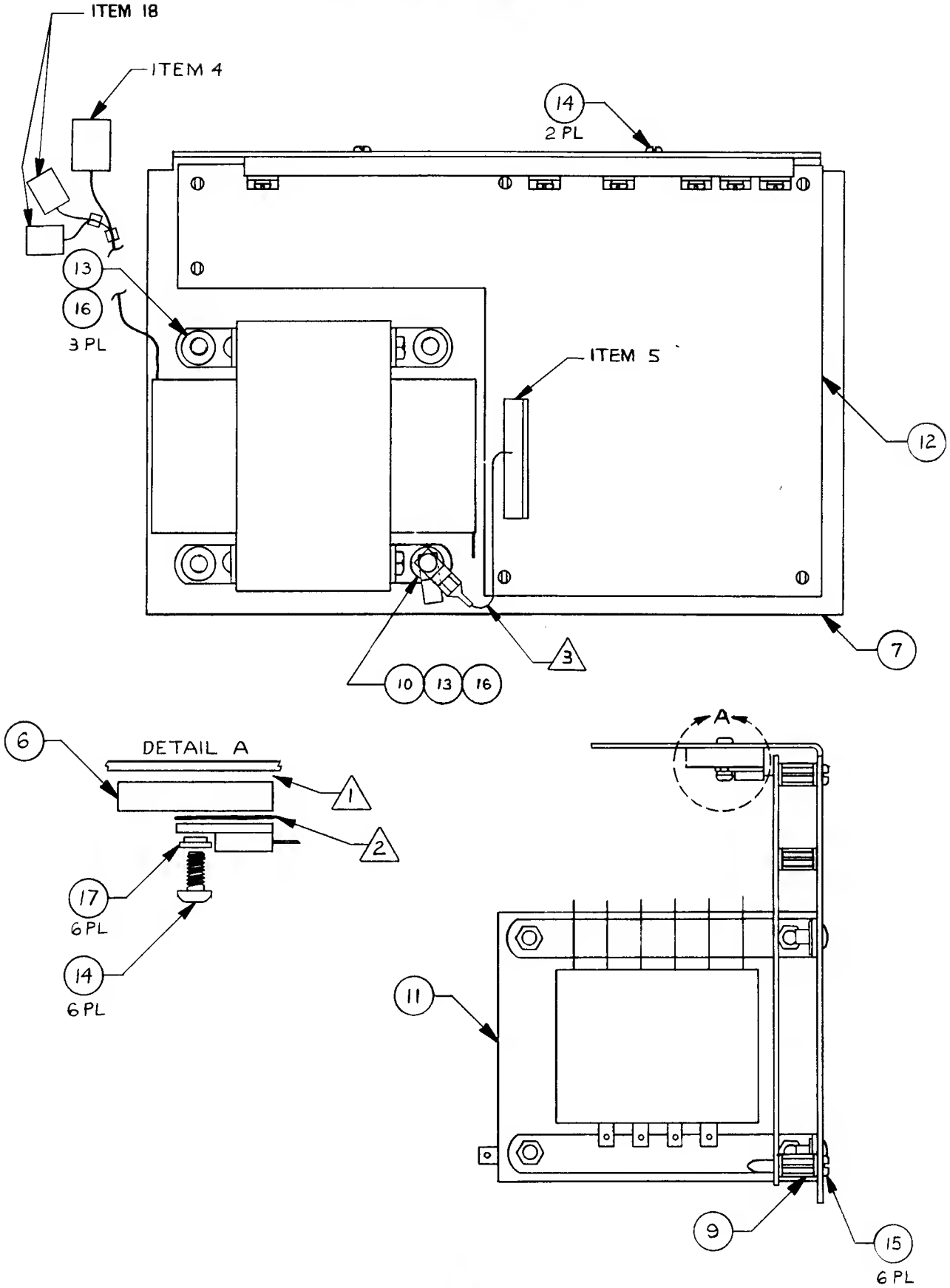

Linear Power Supply Assembly
800-0146

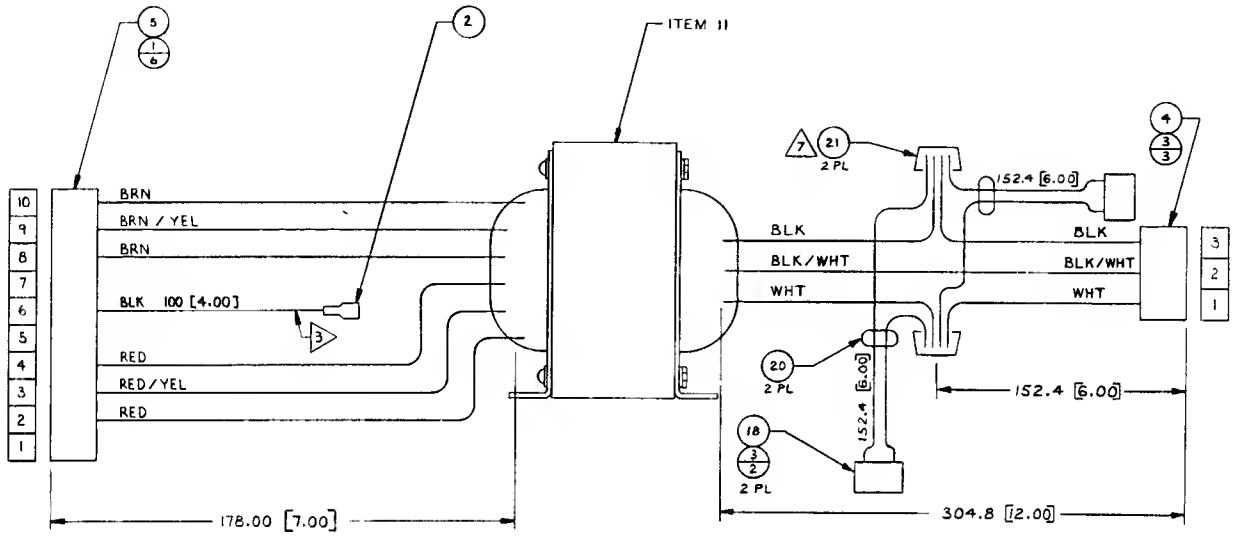

GAME POWER SUPPLY PC ASSEMBLY DRAWING NUMBER 800-0128

ITEM NO.	PART NO.	QTY REQD.	DESCRIPTION	REF DES.
1	150-0088	9	Electrolytic Capacitor, 10uf, 25V RDL	C2,C3,C7, C10,C11,C14, C16,C19,C20
2	150-0092	2	Electrolytic Capacitor, 100uf, 25V RDL	C15,C26
3	150-0095	1	Electrolytic Capacitor, 3300uf, 16V RDL	C24
4	150-0096	1	Electrolytic Capacitor, 6800uf, 16V RDL	C25
5	150-0097	2	Electrolytic Capacitor, 4700uf, 25V RDL	C22,C23
6				
7	151-0002	1	Ceramic Capacitor, 100pf, 50V	C9
8	151-0007	1	Ceramic Capacitor,.005uf,100V	C5
9	151-0008	1	Ceramic Capacitor,.001uf, 50V	C17
10	151-0011	2	Ceramic Capacitor, .01uf, 50V	C4,C33
11	151-0012	12	Ceramic Capacitor, .1uf, 50V	C6,C8,C13, C18,C21, C26-C32
12	170-0202	1	PC Board	
13	151-0021	1	Ceramic Capacitor, 20pf, 50V	C12
14	313-0001	1	IC LM723 DIP	U1

GAME POWER SUPPLY PC ASSEMBLY-Continued DRAWING NUMBER 800-0128

ITEM NO.	PART NO.	QTY REQD.	DESCRIPTION	REF DES.
15	313-0037	1	IC TL081	U2
16	313-0015	1	IC LM320T-12	U5
17	313-0023	1	IC LM320T-5	U4
18	471-0011	1	Resistor, 10 ohm, ½W 5%	R19
19	471-0101	1	Resistor, 100 ohm, ½W 5%	R2
20	471-0102	6	Resistor, 1K ohm, ½W 5%	R6,R7,R11, R21,R22,R24
21	471-0103	2	Resistor, 10K ohm, ½W 5%	R8,R27
22	471-0122	1	Resistor, 1.2K ohm, ½W 5%	R3
23	471-0221	1	Resistor, 220 ohm, ½W 5%	R33
24	471-0222	3	Resistor, 2.2K ohm, ½W 5%	R13,R16,R26
25	471-0272	1	Resistor, 2.7K ohm, ½W 5%	R30
26	471-0332	1	Resistor, 3.3K ohm, ½W 5%	R4
27	471-0471	1	Resistor, 470 ohm, ½W 5%	R9
28	471-0472	2	Resistor, 4.7K ohm, ½W 5%	R1,R29
29	471-0473	1	Resistor, 47K ohm, ½W 5%	R10
30	473-00R1	1	Resistor, .1 ohm, 5W 3%	R32
31	473-00R2	3	Resistor, .2 ohm, 3W 5%	R12,R14,R15
32	475-0004	2	Pot 1K Car PCMTV	R5,R23
33	481-0004	8	Diode MR501	D1-D8
34				
35	481-0006	3	Diode IN914/IN4148	D9-D11
36	482-0006	3	Transistor 2N4403	Q1-Q3

GAME POWER SUPPLY PC ASSEMBLY-Continued DRAWING NUMBER 800-0128

ITEM NO.	PART NO.	QTY REQD.	DESCRIPTION	REF DES.
37	482-0014	2	Transistor 2N4401	Q4, Q5
38	482-0019	2	Transistor TIP120	Q6,Q8
39	482-0100	2	Transistor TIP125	Q7,Q9
40	514-0002	2	3A Norm Fuse	F3,F4
41	514-0003	8	Fuse Mounting Clip	
42	514-0006	1	1.5A Norm Fuse	F2
43	212-0004	2	4-Pin Male Connector	
44	212-0021	2	10-Pin Male Connector	
45	514-0055	1	5A Norm Fuse	F1
46	471-0220	1	Resistor, 22 ohm, ½W 5%	R17
47	471-0223	2	Resistor, 22K ohm, ½W 5%	R20,R25
48	471-0681	1	Resistor, 680 ohm, ½W 5%	R18
49	471-0104	1	Resistor, 100K ohm, ½W 5%	R28

Game Power Supply PC Assembly
800-0128

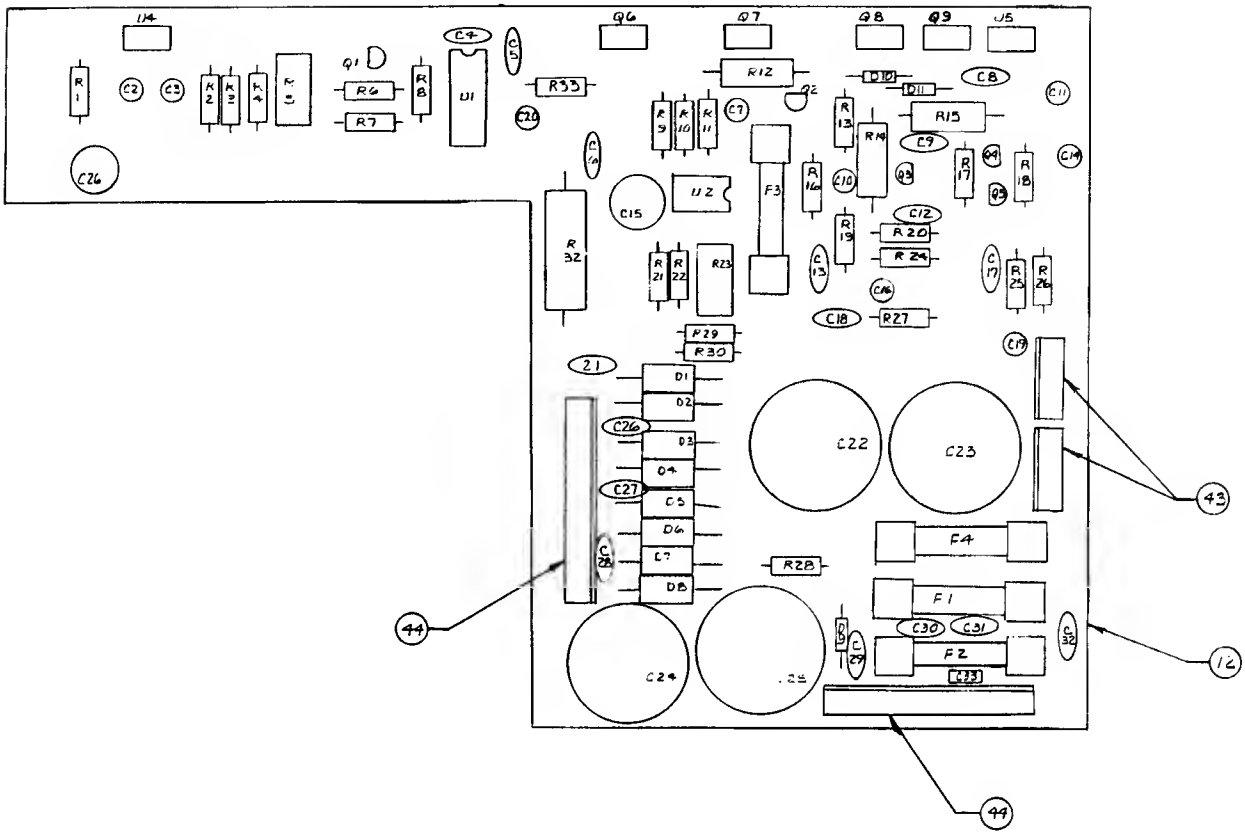

FROGGER GAME ELECTRONICS ASSEMBLY DRAWING NUMBER 834-0086

ITEM NO.	PART NO.	QTY REQD.	DESCRIPTION
1	280-0257	10	Spring Washer
2	280-0373	3	Pan Head Phillips Screw, M3-4
3	280-0260	2	Hex Nut, M3 ISO
4	280-0265	5	Pan Head Phillips Screw, M3-6
5	280-0267	8	Spacer Tube, .75L
6	280-0268	3	Spacer Tube, 1.00L
7	280-0269	5	Plastic Polycarbonate Washer, 3.3-8 x 0.8
8	280-0270	2	Pan Head Phillips Screw, M3 x 50 ISO
9	280-0271	4	Pan Head Phillips Screw, M3 x 30 ISO
10	280-0272	4	PCB Mounting Foot
11	600-0091	1	34-Pin Flat Cable and Plug Assembly
12	834-0068	1	Main Logic Board Assembly
13	834-0069	1	Sub Logic Board Assembly

Frogger Game Electronics
834-0086

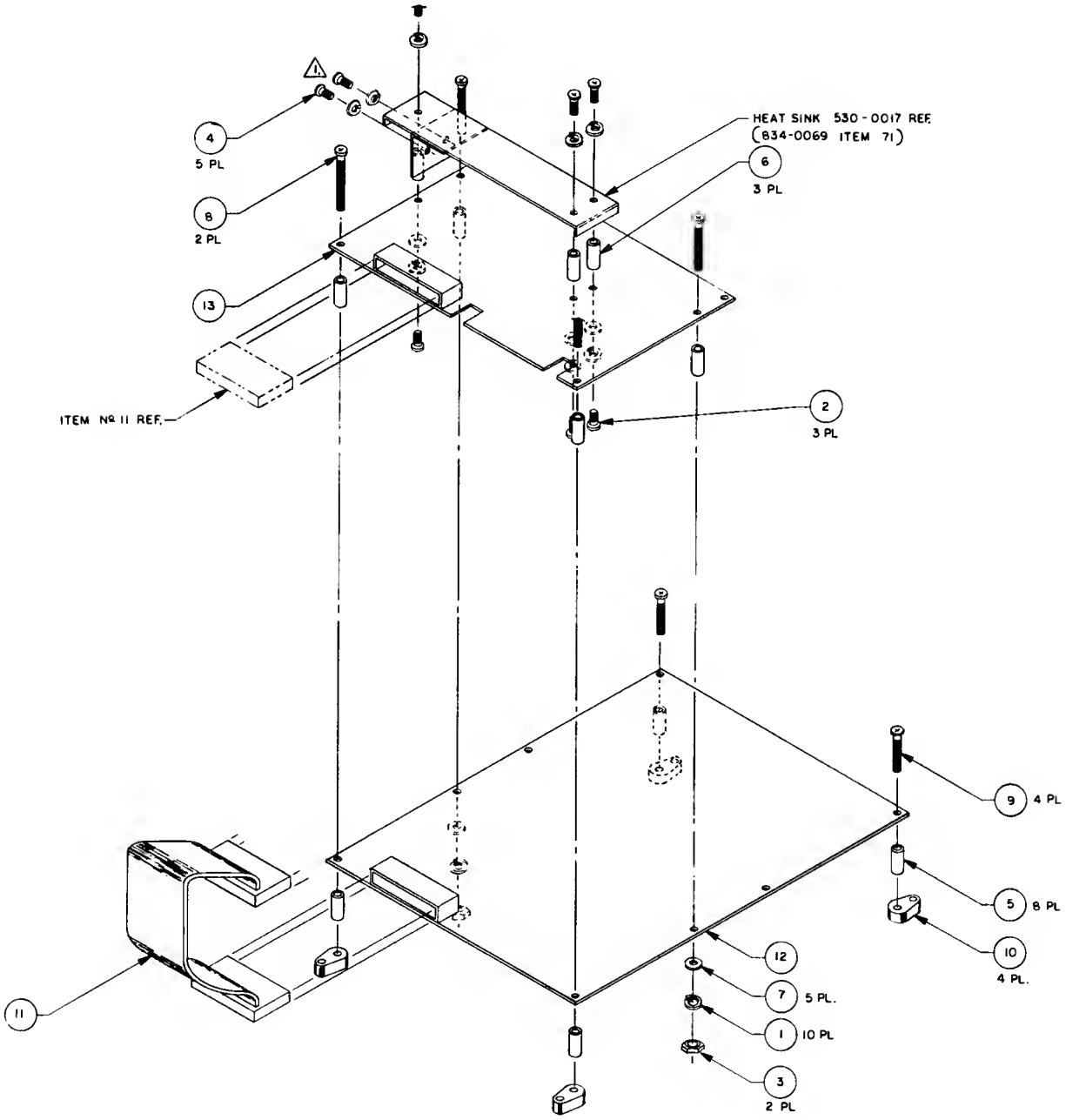

SUB LOGIC BOARD ASSEMBLY DRAWING NUMBER 834-0069

ITEM NO.	PART NO.	QTY REQD.	DESCRIPTION	REF DES.
1	150-0092	1	Electrolytic Capacitor, 100mf, 25V, U Type	
2	150-0126	1	Electrolytic Capacitor, 220mf, 10V, U Type	
3	150-0197	1	Electrolytic Capacitor, 100mf, 16V, U Type	
4	150-0200	1	Electrolytic Capacitor, 47mf, 16V, U Type	
5				
6	151-0002	1	Ceramic Capacitor, 100pf, 50V	
7	151-0042	1	Ceramic Capacitor, 470pf, 50V	
8	151-0060	34	Ceramic Capacitor, .1mf, 16V AX	
9				
10	152-0031	2	Film Capacitor, .1mf, 50V	
11	152-0033	1	Film Capacitor, .01mf, 50V	
12	152-0038	3	Film Capacitor, .047mf, 35V	
13				
14	153-0028	3	Tantalum Capacitor, .22mf, 35V	
15	153-0030	1	Tantalum Capacitor, 6.8mf, 16V	
16	153-0046	1	Tantalum Capacitor, .15mf, 35V	
17				
18	170-0237	1	Printed Board	
19				

SUB LOGIC BOARD ASSEMBLY- Continued DRAWING NUMBER 834-0069

ITEM NO.	PART NO.	QTY REQD.	DESCRIPTION	REF DES.
20	212-0105	1	2-Pin Connector Plug	2P
21	212-0106	1	6-Pin Connector Plug	6P
22	212-0107	1	34-Pin Socket	(Flat Cable)
23				
24	213-0001	3	24-Pin Dual Inline Socket	IC32,33,34
25	213-0005	2	40-Pin Dual Inline Socket	IC26, 35
26				
27	230-0035	1	14.318 MHZ Crystal	
28				
29	313-0004	1	IC LM741	IC1
30				
31	314-0005	1	IC 7493	IC6
32	314-0012	5	IC 7408	IC3,10,27,28, 29
33	314-0015	3	IC 7404	IC14,25,39
34	314-0018	2	IC 74LS00	IC12,41
35	314-0058	1	IC 74LS08	IC5
36	314-0061	1	IC 74LS42	IC4
37	314-0062	4	IC 74LS74	IC11,18,19, 20
38	314-0066	2	IC 74LS27	IC9,37
39	314-0068	2	IC 74LS32	IC21,36
40	314-0078	1	IC 74LS02	IC8

ITEM NO.	PART NO.	QTY REQD.	DESCRIPTION	REF DES.
41	314-0099	1	IC 74LS245	IC13
42	314-0142	1	IC 74LS90	IC17
43	314-0195	2	IC 74LS93	IC15,16
44				
45	315-0031	2	IC Z80	IC26
46	315-0045	3	IC CD4066	IC22,23,24
47	315-0046	2	IC 2114	IC30,31
48	315-0050	3	IC 2716	IC32,33,34
49	315-0057	1	IC AY-3-8910	IC35
50	315-0085	1	IC M51516	IC2
51	315-0089	2	IC 8255	IC7,40
52				
53	470-0102	13	Resistor, 1K ohm, ¼W 5%	
54	470-0103	2	Resistor, 10K ohm, ½W 5%	
55	470-0221	17	Resistor, 220 ohm ¼W 5%	
56	470-0331	1	Resistor, 330 ohm, ¼W 5%	
57	470-0472	1	Resistor, 4.7K ohm, ¼W 5%	
58	470-0512	6	Resistor, 5.1K ohm, ¼W 5%	
59	470-0562	1	Resistor, 5.6K ohm, ¼W 5%	
60	470-0821	2	Resistor, 820 ohm, ¼W 5%	
61				
62	477-0035	1	Resistor Pack, 4 x 1K ohm, 1/8W w/c	
63	477-0039	2	Resistor Pack, 8 x 1K ohm, 1/8W w/c	

SUB LOGIC BOARD ASSEMBLY-Continued DRAWING NUMBER 834-0069

ITEM NO.	PART NO.	QTY REQD.	DESCRIPTION	REF DES.
64				
65	482-0160	2	Transistor 2SC1815	
66	482-0230	1	Transistor 2SD361	
67	482-0231	2	Transistor 2SC2320	
68				
69	510-0043	1	6-Position Dip Switch	
70				
71	530-0017	1	Heat Sink	

MAIN LOGIC BOARD ASSEMBLY DRAWING NUMBER 834-0068

ITEM NO.	PART NO.	QTY REQD.	DESCRIPTION	REF DES.
1	150-0126	1	Electrolytic Capacitor, 220mf, 10V U Type	
2	150-0159	1	Electrolytic Capacitor, 220mf, 16V U Type	
3	150-0199	1	Electrolytic Capacitor, 10mf, 16V U Type	
4				
5	151-0002	1	Ceramic Capacitor, 100pf, 50V	
6	151-0042	2	Ceramic Capacitor, 470pf, 50V	
7	151-0060	57	Ceramic Capacitor, .1mf, 16V	
8				
9	170-0236	1	PC Board	
10				
11	212-0107	1	34-Pin Socket	(Flat Cable)
12				
13	213-0001	6	24-Pin Dual Inline Socket	IC5,6,7,8, 101,102
14	213-0005	1	40-Pin Dual Inline Socket	IC2
15				
16	230-0073	1	18.432 MHZ Crystal	
17				
18	314-0006	1	IC 7474	IC96
19	314-0018	4	IC 74LS00	IC30,34,35, 67

ITEM NO.	PART NO.	QTY REQD.	DESCRIPTION	REF DES.
20	314-0019	1	IC 74LS04	IC66
21	314-0022	3	IC 74161	IC71,82,95
22	314-0058	3	IC 74LS08	IC45,46,65
23	314-0059	1	IC 74LS10	IC68
24	314-0060	3	IC 74LS20	IC32,36,78
25	314-0062	4	IC 74LS74	IC26,79,80 92
26	314-0068	1	IC 74LS32	IC44
27	314-0070	7	IC 74LS86	IC47,48,70, 81,83,94,100
28	314-0073	3	IC 74LS175	IC43,54,55
29	314-0075	1	IC 74LS393	IC69
30	314-0076	9	IC 74LS157	IC62,63,64, 89,90,97,98, 99,106
31	314-0078	3	IC 74LS02	IC23,33,53
32	314-0087	2	IC 74LS139	IC28,41
33	314-0092	2	IC 2816	IC74,75
34	314-0097	3	IC 74LS161	IC37,49,84
35	314-0098	4	IC 74LS194	IC91,103, 104,105
36	314-0100	3	IC 74LS273	IC24,87,88
37	314-0101	2	IC 74LS283	IC76,77

MAIN LOGIC BOARD ASSEMBLY-Continued DRAWING NUMBER 834-0068

ITEM NO.	PART NO.	QTY REQD.	DESCRIPTION	REF DES.
38	314-0102	7	IC 74LS367	IC3,4,14,27, 38,39,52
39	314-0103	1	IC 74LS368	IC73
40	314-0104	5	IC 74LS138	IC15,16,17, 18,29
41	314-0108	1	IC 74LS107	IC72
42	314-0119	1	IC 74LS377	IC61
43	314-0143	1	IC 74LS259	IC42
44	314-0204	1	IC 74LS126	IC93
45	314-0099	1	IC 74LS245	IC1
46	315-0050	2	IC 2716	IC101,102
47	315-0080	1	IC 6331	IC25
48	315-0083	3	IC 2732	IC5,6,7,8
49	315-0104	4	IC 2114-2	IC50,51,85, 86
50	315-0105	4	IC 2114-3	IC20,21,22, 23
51	315-0216	5	IC 74S201	IC56,57,58, 59,60
52	315-0041	1	IC Z80A	IC2
53	470-0101	1	Resistor, 100 ohm, ¼W 5%	
54	470-0102	12	Resistor, 1K ohm, ¼W 5%	
55	470-0103	1	Resistor, 10K ohm, ¼W 5%	

MAIN LOGIC BOARD ASSEMBLY-Continued DRAWING NUMBER 834-0068

ITEM NO.	PART NO.	QTY REQD.	DESCRIPTION	REF DES.
56	470-0221	4	Resistor, 220 ohm, ¼W 5%	
57	470-0331	2	Resistor, 330 ohm, ¼W 5%	
58	470-0471	9	Resistor, 470 ohm, ¼W 5%	
59				
60	481-0089	1	Diode 10D1	
61	481-0164	1	Diode 1S1588	
62				
63	482-0229	1	Transistor 2SA697	
64	482-0231	1	Transistor 2SC2320	

MECHANICAL COIN MECHANISM ASSEMBLY DRAWING NUMBER 800-0135

ITEM NO.	PART NO.	QTY REQD.	DESCRIPTION
1	250-0285	1	Modified Frame Cash Door
2	220-0157	2	Anticheat Coin Mechanism
3	220-0008	1	Digital Counter
4	220-0035	1	Fort Lock IR
5			
6			
7			
8	420-0038	1	Important Note Decal
9	280-0004	3	Wire Hold-down Clip
10	280-0323	2	Electro Tap Splice Amp
11	800-3135	1	Coin Mechanism Service Assembly
12		1	Flat Washer #8
13		7	Tamper-proof Screw #8-32 x ½"
14		9	Split Lock Washer #8
15		9	Hex Nut, #8-32
16		1	Tamper-proof Screw #8-32 x 1"
17		2	Sheet Metal Screw #6 x 3/8"
18		2	Sheet Metal Screw #6 x ½"

Mechanical Coin Mechanism Assembly
800-0135

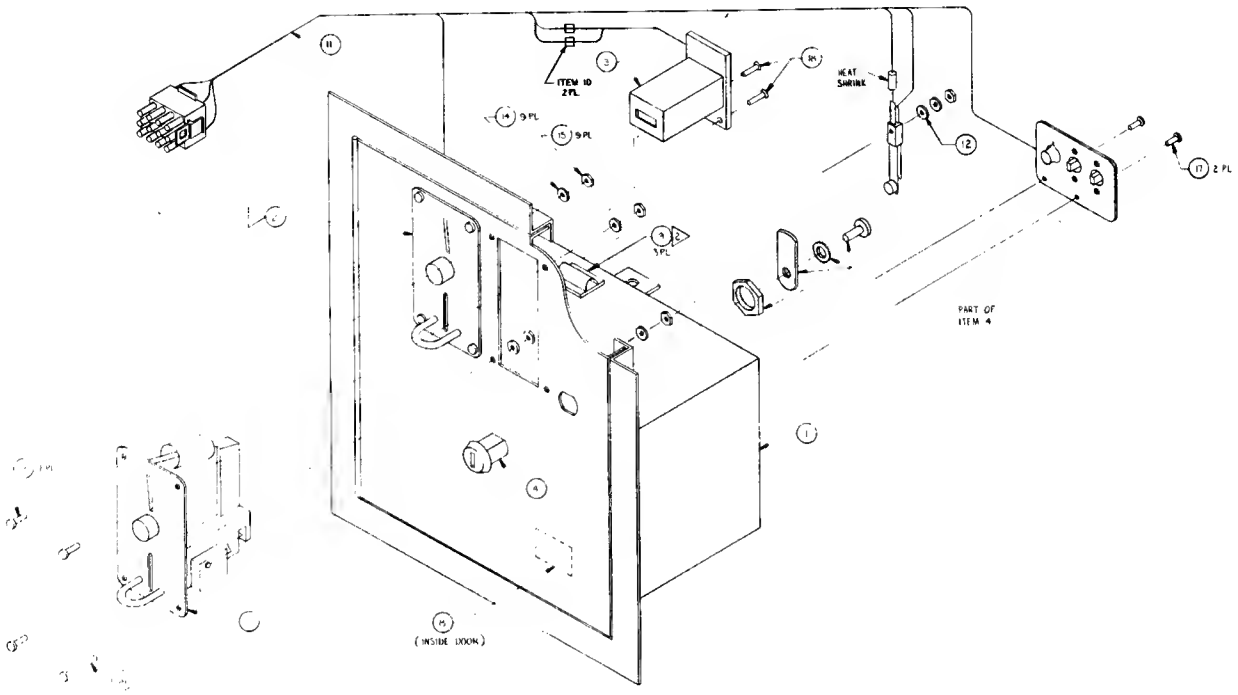

POWER TRANSFORMER ASSEMBLY DRAWING NUMBER 800-0130

ITEM NO.	PART NO.	QTY REQD.	DESCRIPTION
1	211-0022	6	Crimp Connector 3/16"
2	211-0042	11	Connector Socket Amp
3	211-0043	1	2-Pin Connector Plug Amp
4	211-0045	1	6-Pin Connector Plug Amp
5	211-0059	1	3-Pin Connector Plug Amp
6	280-0005	9	Cable Tie
7	280-0323	2	Electro Tap Splice Amp
8	560-0054	1	Isolation Transformer
9	600-0079	1ft.	2 Conductor Zip Cord
10	250-0439	1	Transformer Mounting Plate
11	280-0327	2	Base Tie Wrap
12	280-0117	1	Rivet Tab
13	514-0054	1	4 Amp Fast Blow Fuse
14	514-0053	1	5 Amp Slow Blow Fuse
15	514-0001	1	2 Amp Slow Blow Fuse
16	514-0052	1	Quick 3 Position Fuse Block
17		4	Washer #8
18		4	Pop Rivet 3/16 x ½
19		2	Pop Rivet 1/8 x ½

Power Transformer Assembly
800-0130

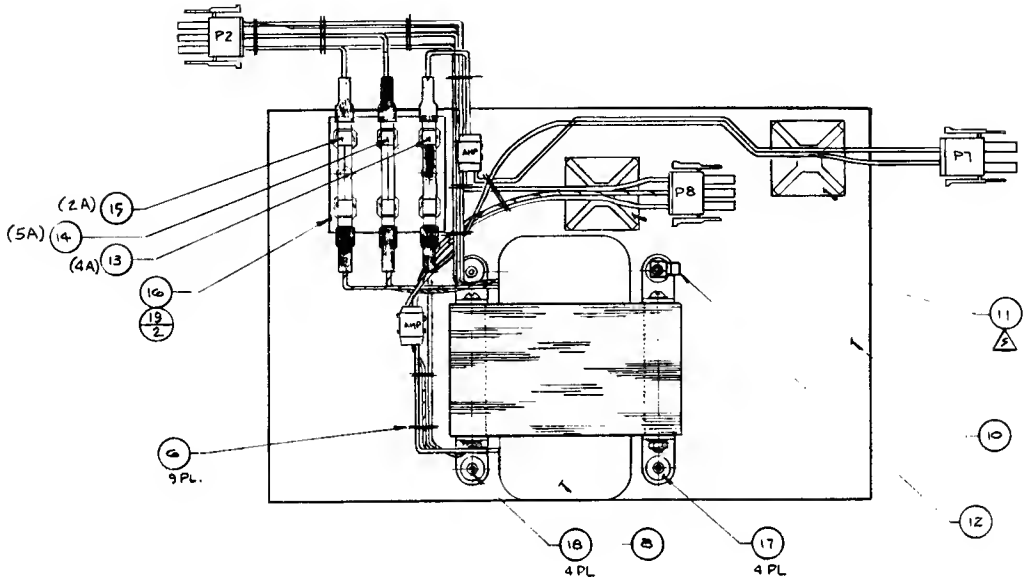

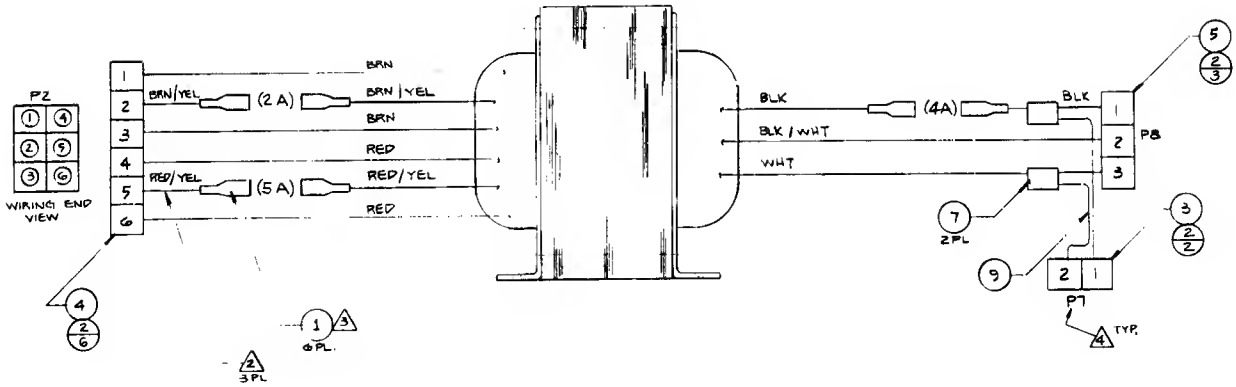

19" VERTICAL COLOR MONITOR ASSEMBLY DRAWING NUMBER 800-0140

ITEM NO.	PART NO.	QTY REQD.	DESCRIPTION
1	200-0019	1	19" Vertical Color Monitor
2			
3			
4	280-0004	1	Hold Down Wire Clip
5			
6	252-0089	1	Vertical Monitor Mounting Board
7		6	Hex Head Machine Bolt $\frac{1}{4}$-20 x 1 $\frac{1}{4}$
8		12	Flat Washer $\frac{1}{4}$
9		6	Split Lock Washer $\frac{1}{4}$
10		6	Hex Nut $\frac{1}{4}$-20
11	280-0323	2	Electro Tap Splice Amp
12	800-0159	1	Monitor Power Harness Assembly

19" Vertical Color Monitor Assembly
800-0140

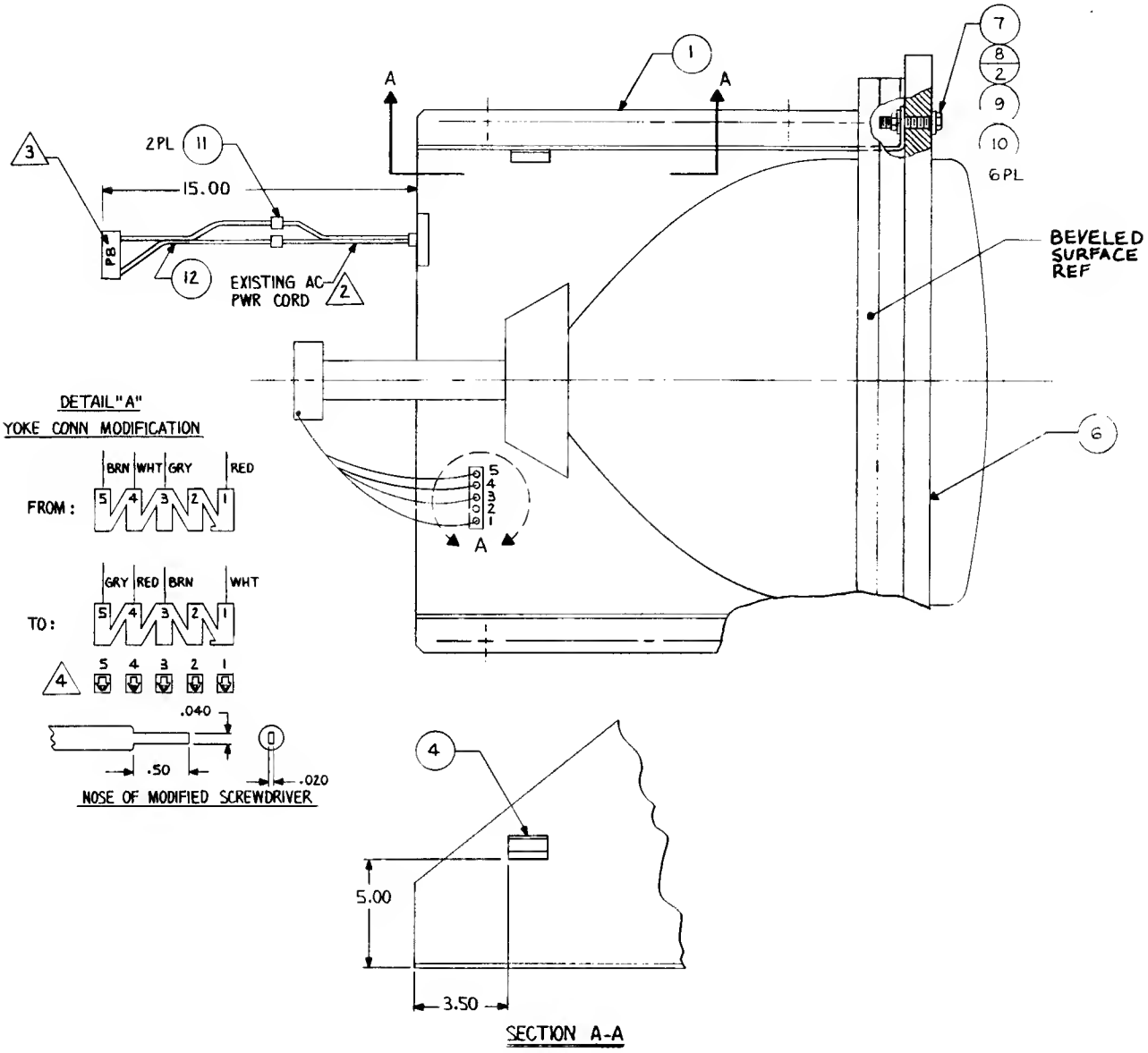

AC JUNCTION BOX ASSEMBLY DRAWING NUMBER 800-0145

ITEM NO.	PART NO.	QTY REQD.	DESCRIPTION
1	140-0020	1	Metal Junction Box
2			
3			
4	211-0038	5	Female Quick Connector 3/16
5	280-0361	1	S/REL AC Cord Bushing
6	270-0001	1	EMI Filter
7	280-0007	1	S/REL ½ Bushing
8	280-0362	4	Electric Crimp Sleeve 24-18 AWG
9			
10	510-0013	1	Cherry Switch SPDT
11	514-0001	1	250V Slowblow 2 amp Fuse
12	514-0005	1	Fuse Holder
13	600-0001	1	3 Condition Line Cord
14			
15	600-0079	2ft.	Zip Cord Line
16	280-0005	2	Cable Tie
17		2	Screw, #6-32 x 5/8
18		2	Hex Head Nut #6-32
19		2	Interior Star Lock Washer #6
20		1	Stud #8-32 x 1
21		3	Hex Head Nut #8-32
22		2	Interior Star Lock Washer #8
23		.5ft.	Shrink Tubing - ¼ Diameter
24		1	Flat Washer ¼"

ITEM NO.	PART NO.	QTY REQD.	DESCRIPTION
25		1	Hex Head Nut #10-24
26		1	Carriage Bolt #10-24 x 1 3/4"
27	310-0016-16	1	Insulated Tubing .187 ID

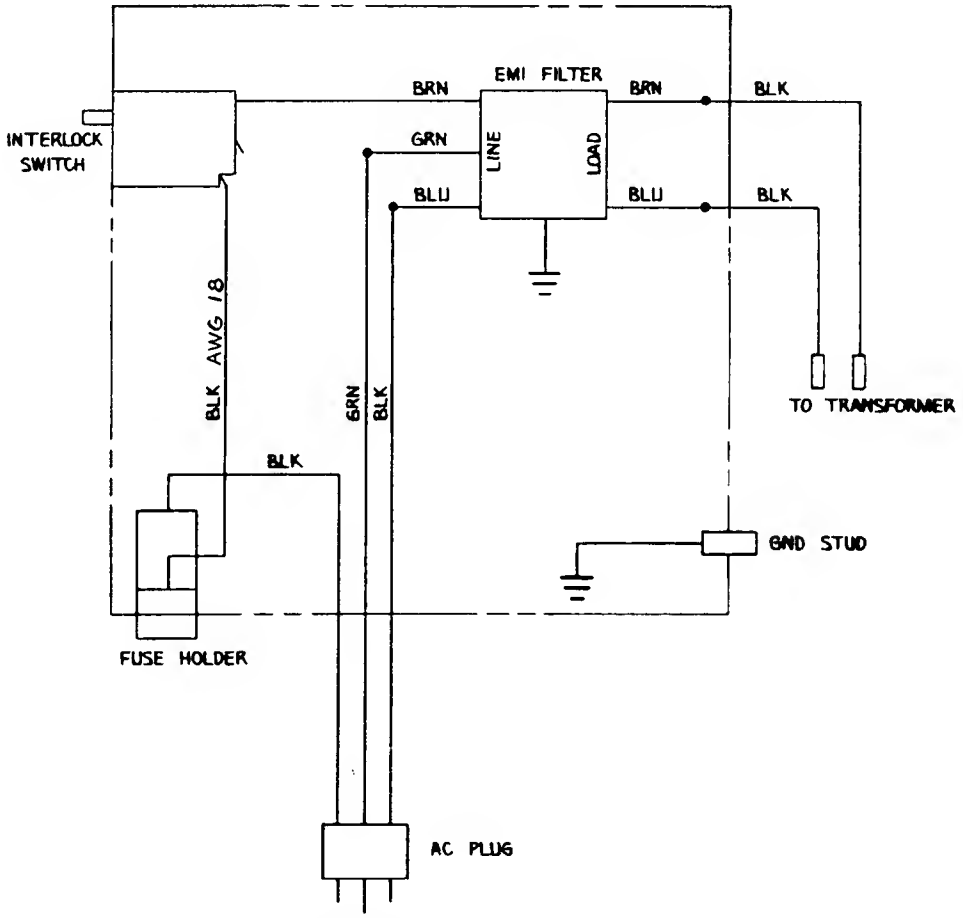

JUNCTION BOX SCHEMATIC

AC Junction Box Assembly
800-0145

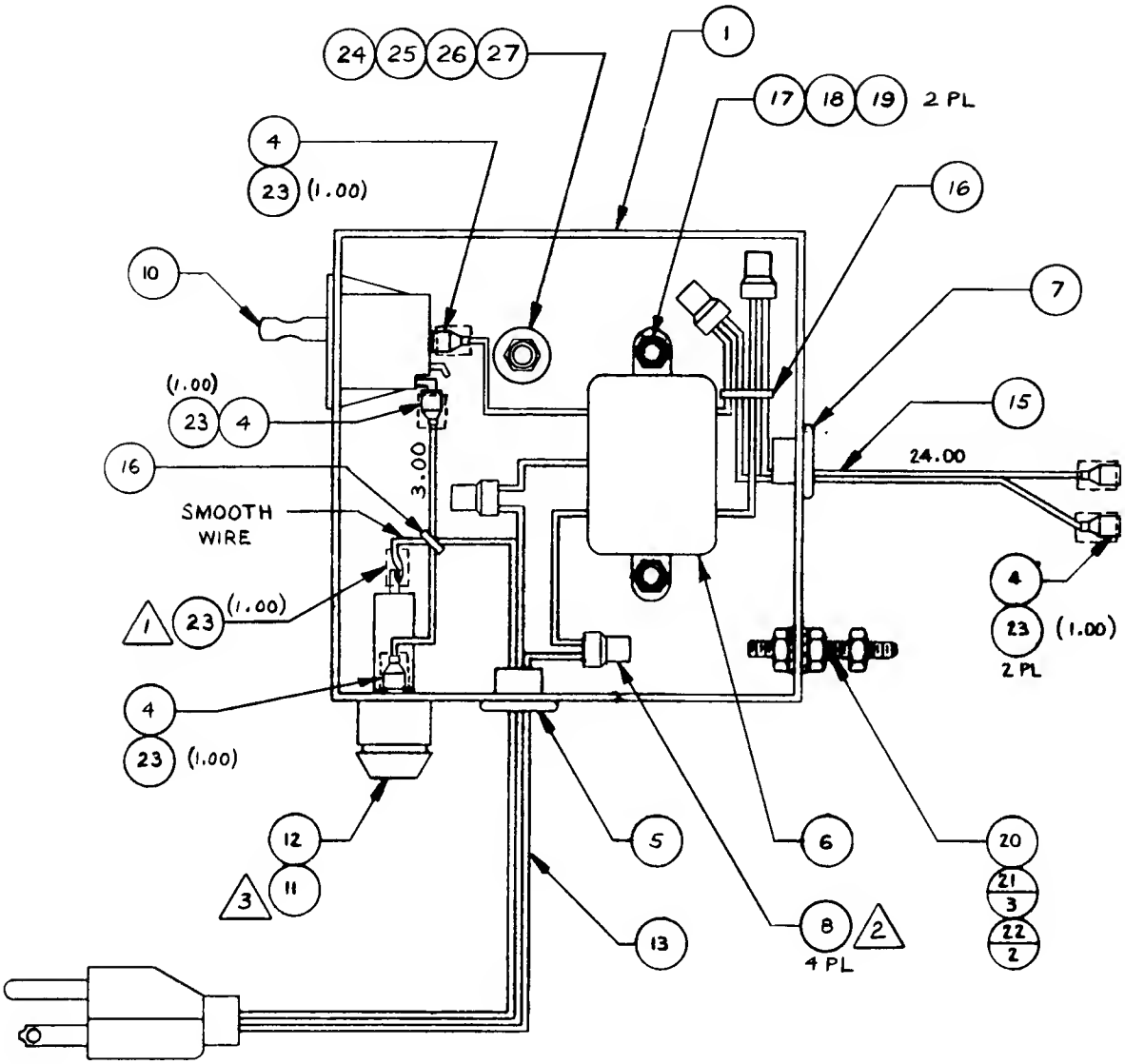

FROGGER GAME ELECTRONICS ASSEMBLY DRAWING NUMBER 834-0084

ITEM NO.	PART NO.	QTY REQD.	DESCRIPTION
1	834-0085	1	Main IC Board Assembly
2	834-0074	1	Sound Board Assembly

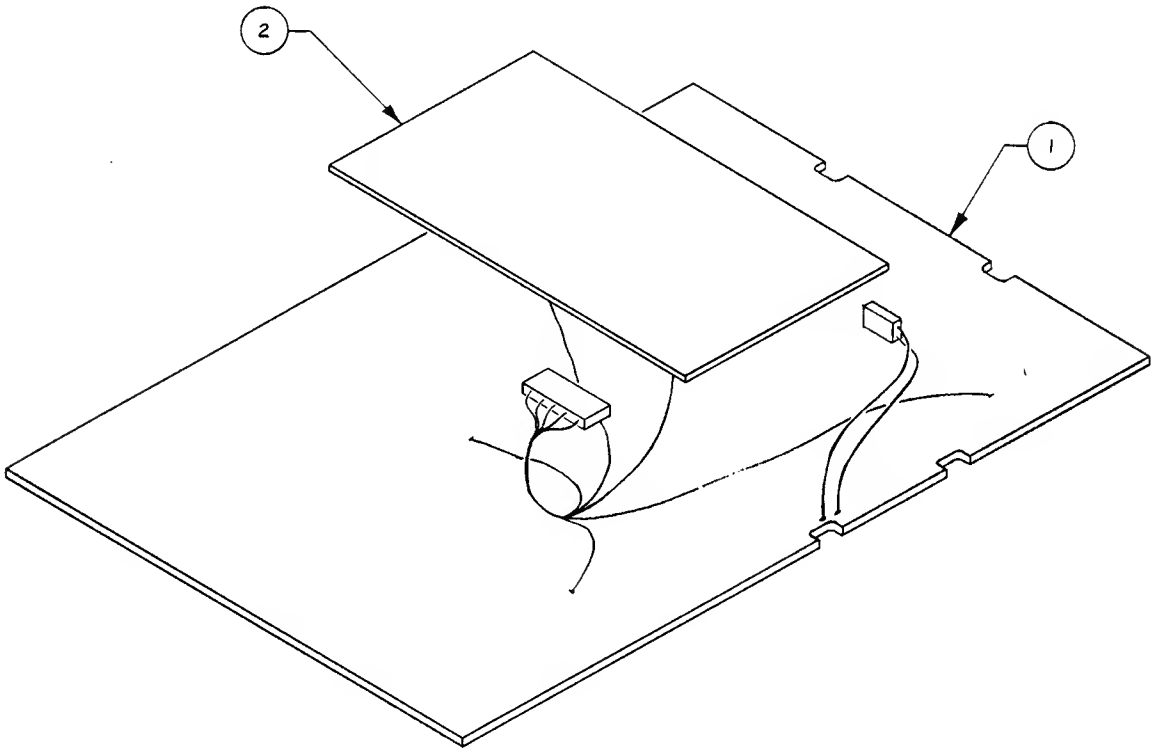

SERVICE SWITCH ASSEMBLY DRAWING NUMBER 800-3197

ITEM NO.	PART NO.	QTY REQD.	DESCRIPTION
1	250-0068	1	Switch Bracket
2	420-0535	1	Service Switch Decal
3	510-0051	1	Push Button Slide Switch
4	285-0001-04	2	Aluminum Rivet 1/8"

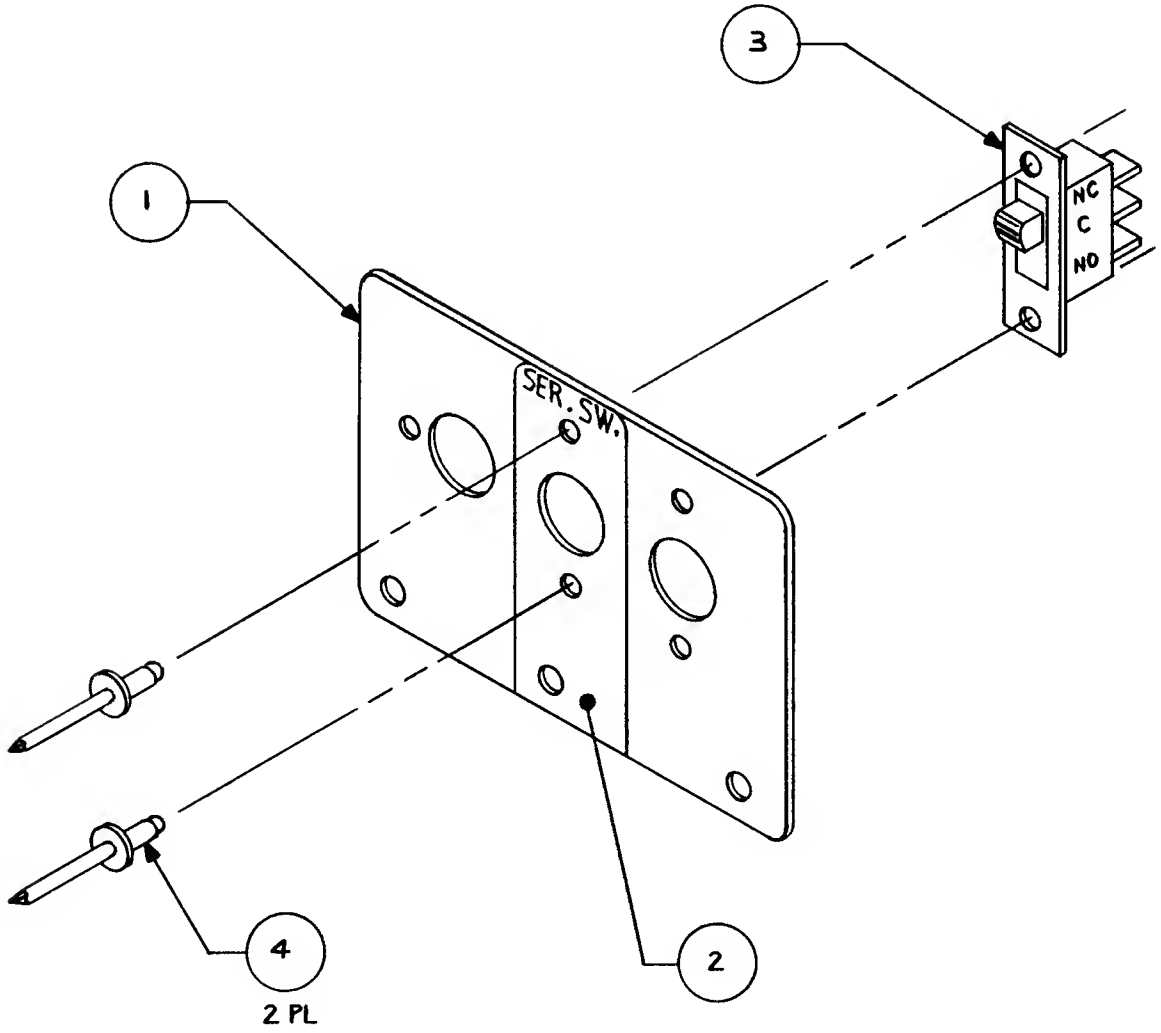

FLUORESCENT LAMP ASSEMBLY DRAWING NUMBER 800-0147

ITEM NO.	PART NO.	QTY REQD.	DESCRIPTION
1	390-0083	1	18" Fluorescent Lamp Fixture
2	211-0027	1	Ring Lug Connector #10
3		1	Round or Pan Head Machine Screw, #6-32 x ½"
4			
5	211-0044	1	Cap Amp Connector, 2-Pin
6	211-0041	2	Pin Amp Connector

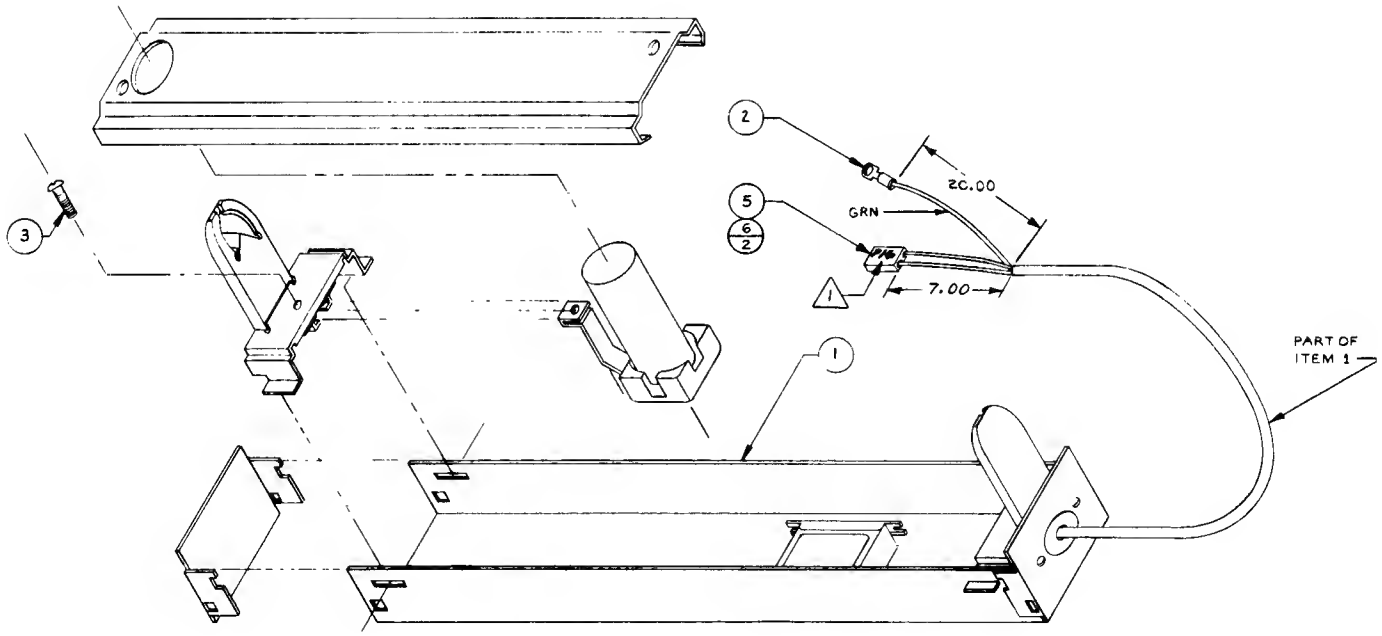

POWER SUPPLY ASSEMBLY DRAWING NUMBER 800-0312

ITEM NO.	PART NO.	QTY. REQ'D	DESCRIPTION
1	834-0070	1	Power Supply Assy. (Sega FR-4100)
2	211-0060	1	Conn CAP AMP 3 Pin
3	211-0043	1	Conn Plug AMP 2 Pin
4	280-0117	1	Tab Rivet 1/4"
5	211-0059	1	Conn Plug AMP 3 Pin
6	211-0042	4	Conn Socket
7	212-0006	1	Conn Fem 10 Pin
8	211-0005	8	Conn Crimp
9	280-0359	2	Electric Crimp Sleeve
10	280-0005	3	Cable Tie

Power Supply Assembly
800-0312

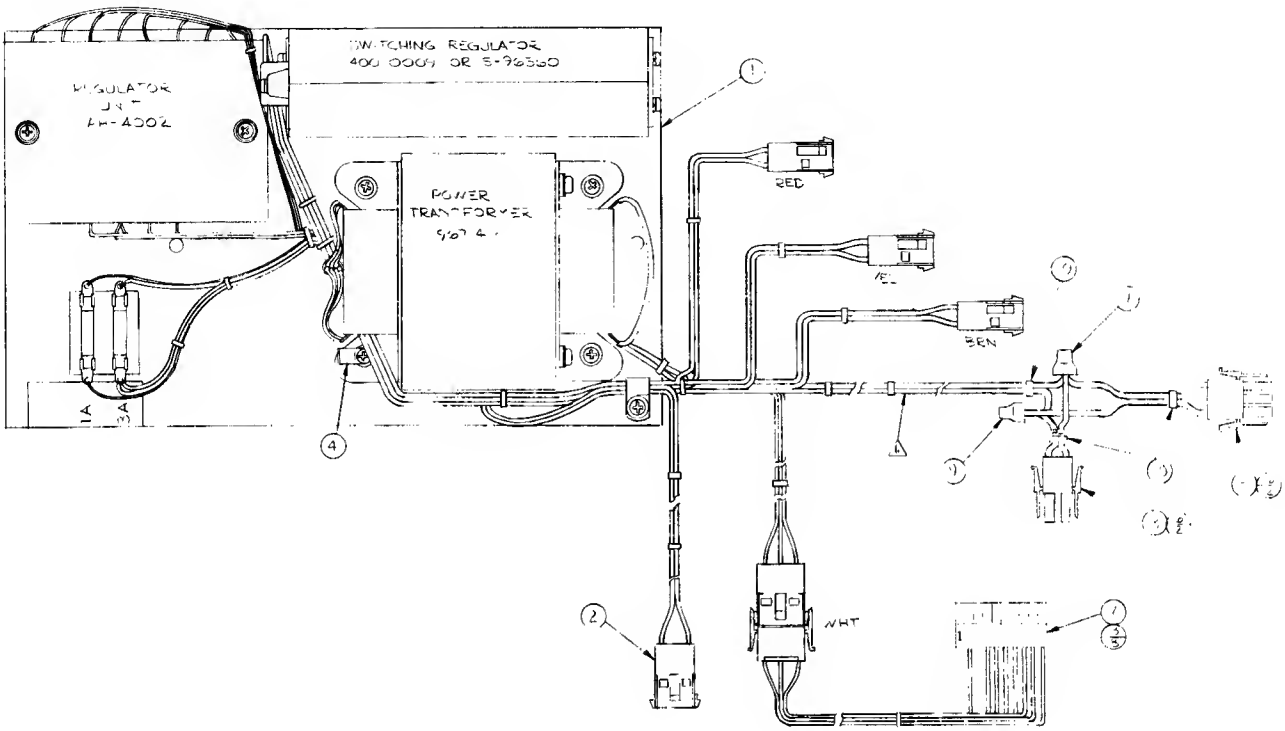

REVISIONS				
ZONE	LTR	DESCRIPTION	DATE	APPROVED
	.	SEE SH #1 SD	9-1-81	

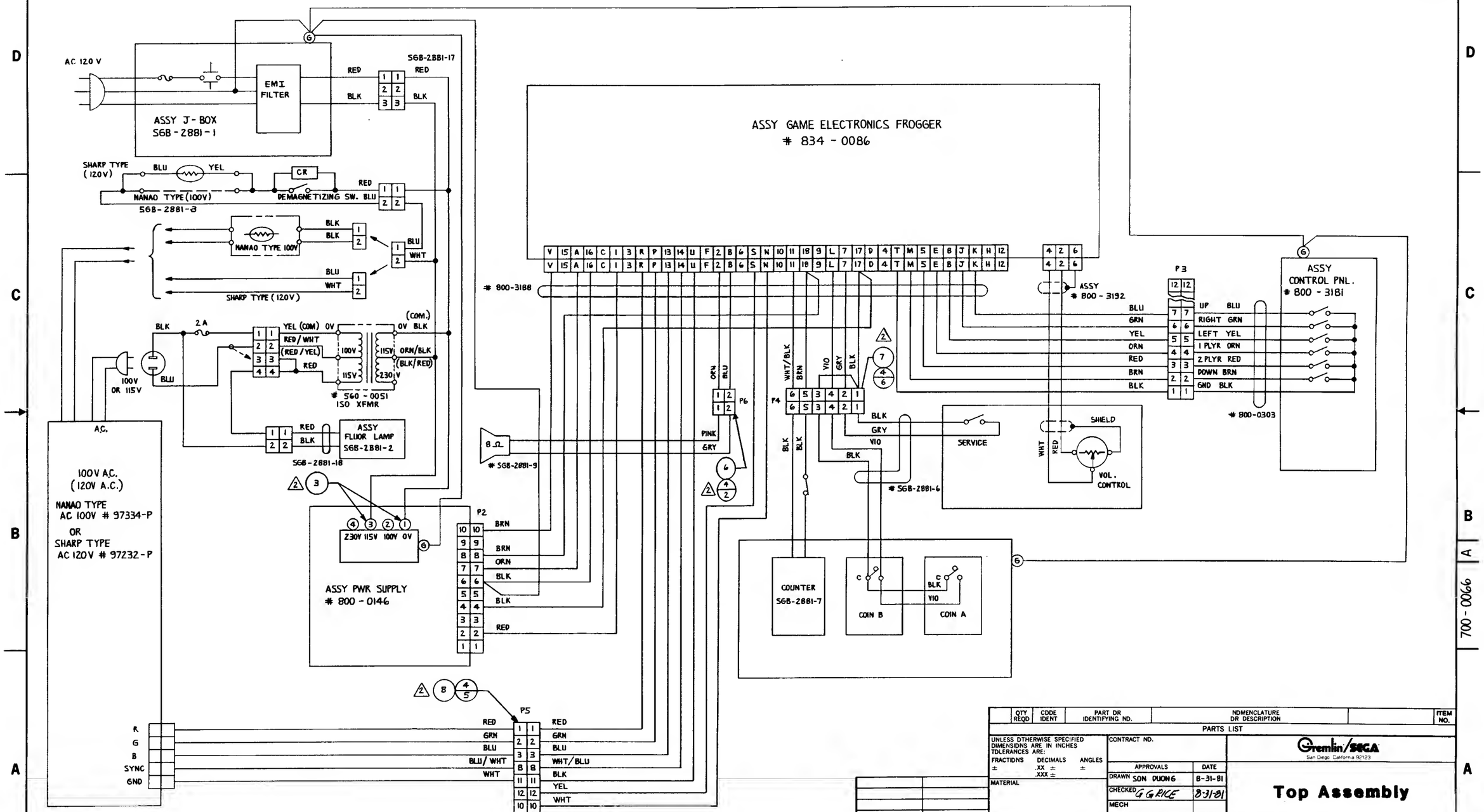

QTY REQD	CODE IDENT	PART OR IDENTIFYING NO.	NOMENCLATURE OR DESCRIPTION	ITEM NO.

PARTS LIST

NEXT ASSY | USED ON

APPLICATION

UNLESS OTHERWISE SPECIFIED DIMENSIONS ARE IN INCHES TOLERANCES ARE:
FRACTIONS ± | DECIMALS .XX ± .XXX ± | ANGLES ±

MATERIAL

FINISH

DO NOT SCALE DRAWING

CONTRACT NO.

APPROVALS		DATE
DRAWN	SON DUONG	8-31-81
CHECKED	G G RICE	8-31-81
MECH		
ELEC		
MFG		
PROJECT		

Gremlin/SEGA
San Diego California 92123

Top Assembly

SIZE	CODE IDENT NO.	DRAWING NO.	REV
D		700-0066	A

SCALE NONE | SHEET 5 OF 5

700-0066

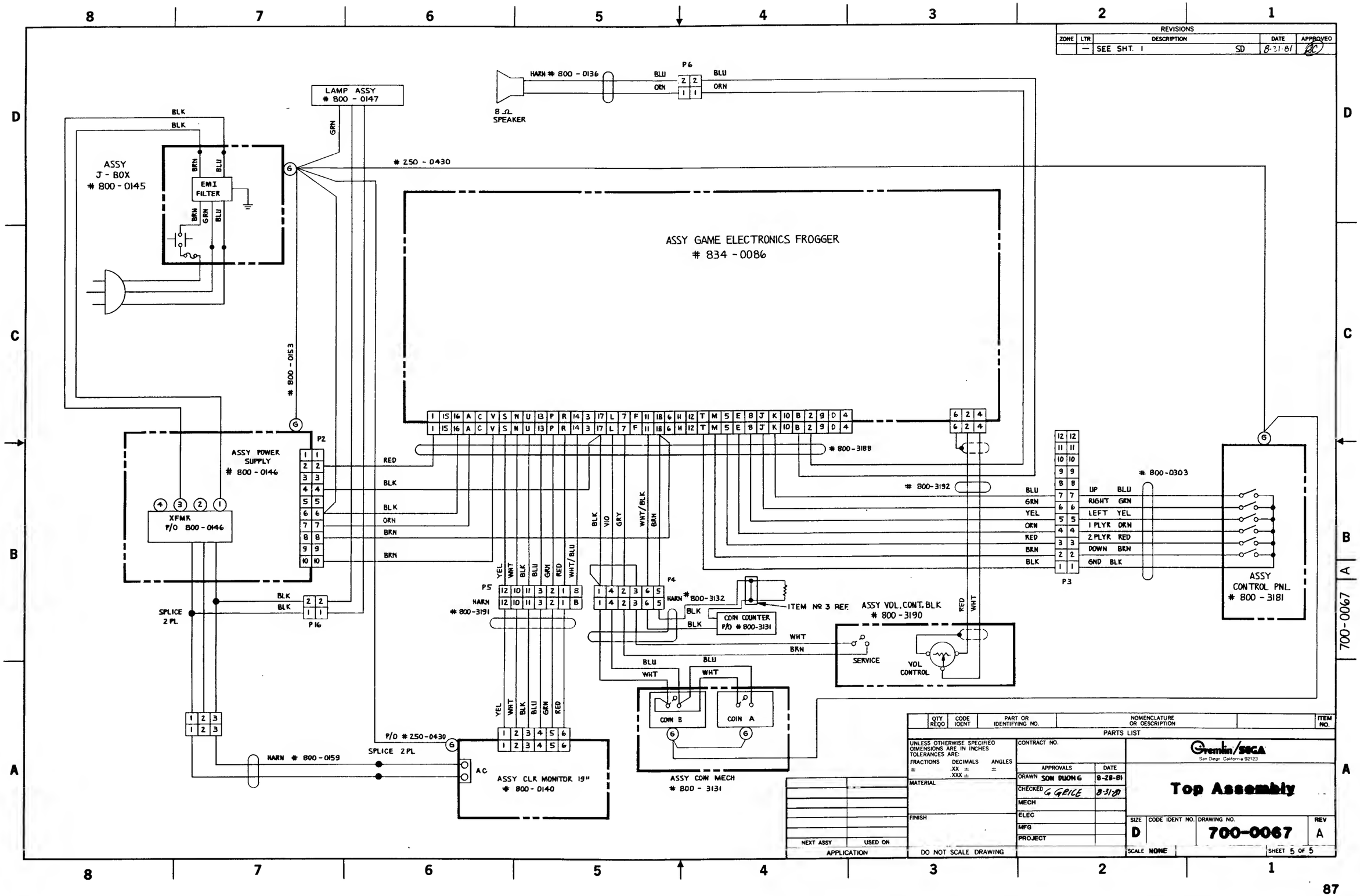
REVISIONS
ZONE LTR DESCRIPTION DATE APPROVED
— SEE SHT. 1 SD 8-31-81
HARN # 800 - 0136
P6
BLU
ORN
8 Ω SPEAKER
LAMP ASSY # 800 - 0147
GRN
BLK
ASSY J - BOX # 800 - 0145
BRN
BLU
EMI FILTER
250 - 0430
ASSY GAME ELECTRONICS FROGGER # 834 - 0086
800 - 0153
800-3188
800-3192
800-0303
ASSY POWER SUPPLY # 800 - 0146
P2
RED
BLK
ORN
BRN
XFMR P/O 800 - 0146
UP
RIGHT
LEFT
1 PLYR
2 PLYR
DOWN
GND
GRY
VIO
WHT/BLK
P3
ASSY CONTROL PNL # 800 - 3181
SPLICE 2 PL
P16
YEL
WHT
GRN
WHT/BLU
P5
HARN # 800-3191
P4
HARN # 800-3132
ITEM Nº 3 REF.
ASSY VOL. CONT. BLK # 800 - 3190
COIN COUNTER P/O # 800-3131
SERVICE
VOL CONTROL
COIN B
COIN A
ASSY COIN MECH # 800 - 3131
P/O # 250-0430
HARN # 800 - 0159
AC
ASSY CLR MONITOR 19" # 800 - 0140
QTY REQD CODE IDENT PART OR IDENTIFYING NO. NOMENCLATURE OR DESCRIPTION ITEM NO.
PARTS LIST
UNLESS OTHERWISE SPECIFIED DIMENSIONS ARE IN INCHES TOLERANCES ARE:
FRACTIONS ± DECIMALS .XX ± .XXX ± ANGLES ±
MATERIAL
FINISH
CONTRACT NO.
APPROVALS DATE
DRAWN SON DUONG 8-28-81
CHECKED G GRICE 8-31-81
MECH
ELEC
MFG
PROJECT
NEXT ASSY USED ON
APPLICATION
DO NOT SCALE DRAWING
Gremlin/SEGA
San Diego California 92123
Top Assembly
SIZE D CODE IDENT NO. DRAWING NO. 700-0067 REV A
SCALE NONE
SHEET 5 OF 5
700-0067

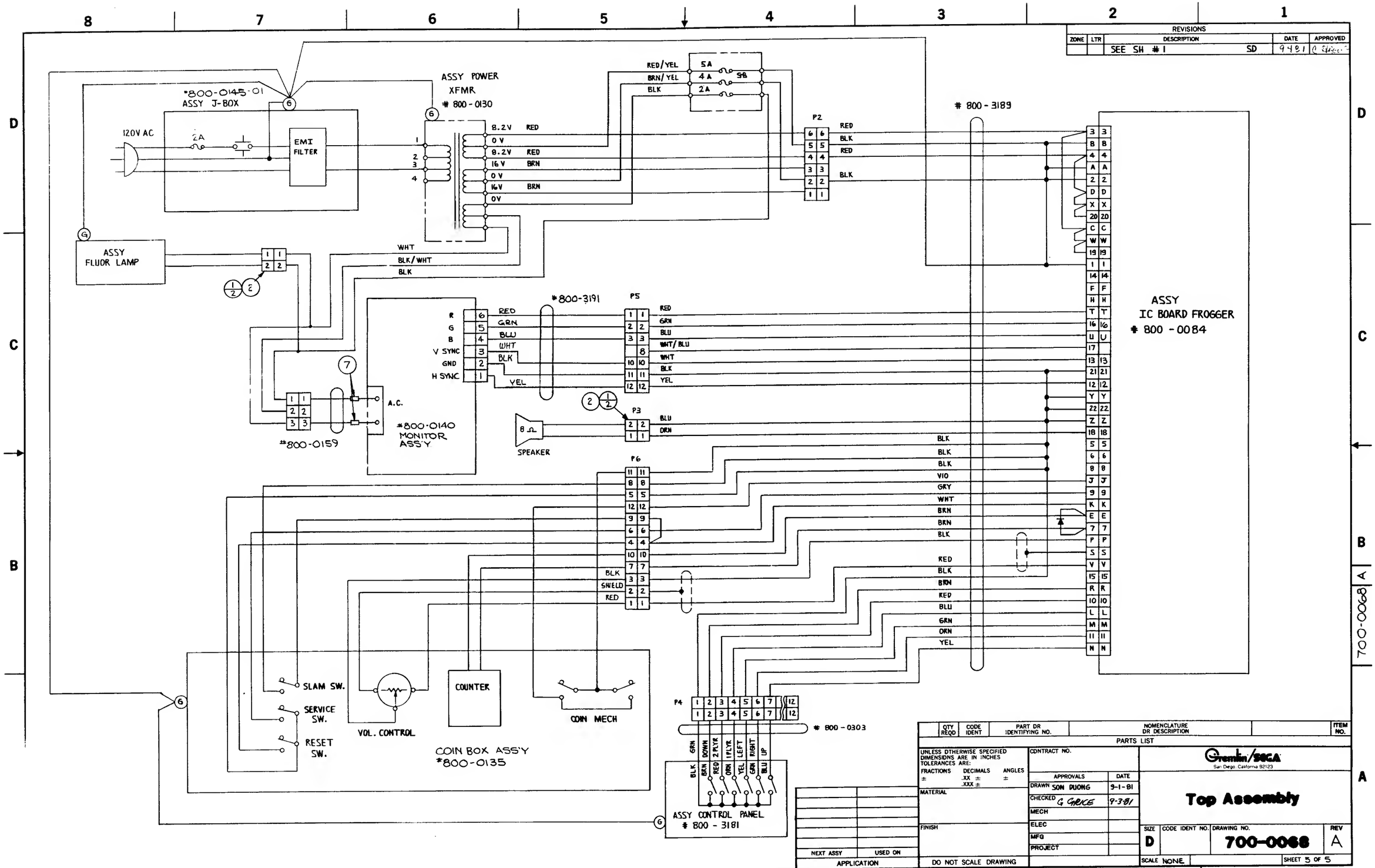
REVISIONS
ZONE LTR DESCRIPTION DATE APPROVED
SEE SH #1 SD 9-2-81
*800-0145-01
ASSY J-BOX
120V AC
2A
EMI FILTER
ASSY POWER XFMR
800-0130
8.2V RED
0 V
8.2V RED
16 V BRN
0 V
16V BRN
0V
RED/YEL
BRN/YEL
BLK
5A
4A
2A
SB
P2
800-3189
ASSY FLUOR LAMP
WHT
BLK/WHT
BLK
*800-3191
P5
R
G
B
V SYNC
GND
H SYNC
RED
GRN
BLU
WHT
BLK
YEL
WHT/BLU
A.C.
*800-0159
*800-0140 MONITOR ASSY
P3
BLU
ORN
8 Ω
SPEAKER
P6
BLK
SHIELD
RED
VIO
GRY
WHT
BRN
ASSY IC BOARD FROGGER
800-0084
SLAM SW.
SERVICE SW.
RESET SW.
VOL. CONTROL
COUNTER
COIN MECH
COIN BOX ASS'Y
*800-0135
P4
800-0303
GRN
DOWN
2 PLYR
1 PLYR
LEFT
RIGHT
UP
ASSY CONTROL PANEL
800-3181
QTY REQD CODE IDENT PART OR IDENTIFYING NO. NOMENCLATURE OR DESCRIPTION ITEM NO.
PARTS LIST
UNLESS OTHERWISE SPECIFIED DIMENSIONS ARE IN INCHES TOLERANCES ARE:
FRACTIONS ± DECIMALS .XX ± .XXX ± ANGLES ±
MATERIAL
FINISH
DO NOT SCALE DRAWING
CONTRACT NO.
APPROVALS DATE
DRAWN SON DUONG 9-1-81
CHECKED G GARCIE 9-3-81
MECH
ELEC
MFG
PROJECT
NEXT ASSY USED ON
APPLICATION
Gremlin/SEGA
San Diego California 92123
Top Assembly
SIZE D CODE IDENT NO. DRAWING NO. 700-0068 REV A
SCALE NONE SHEET 5 OF 5
700-0068

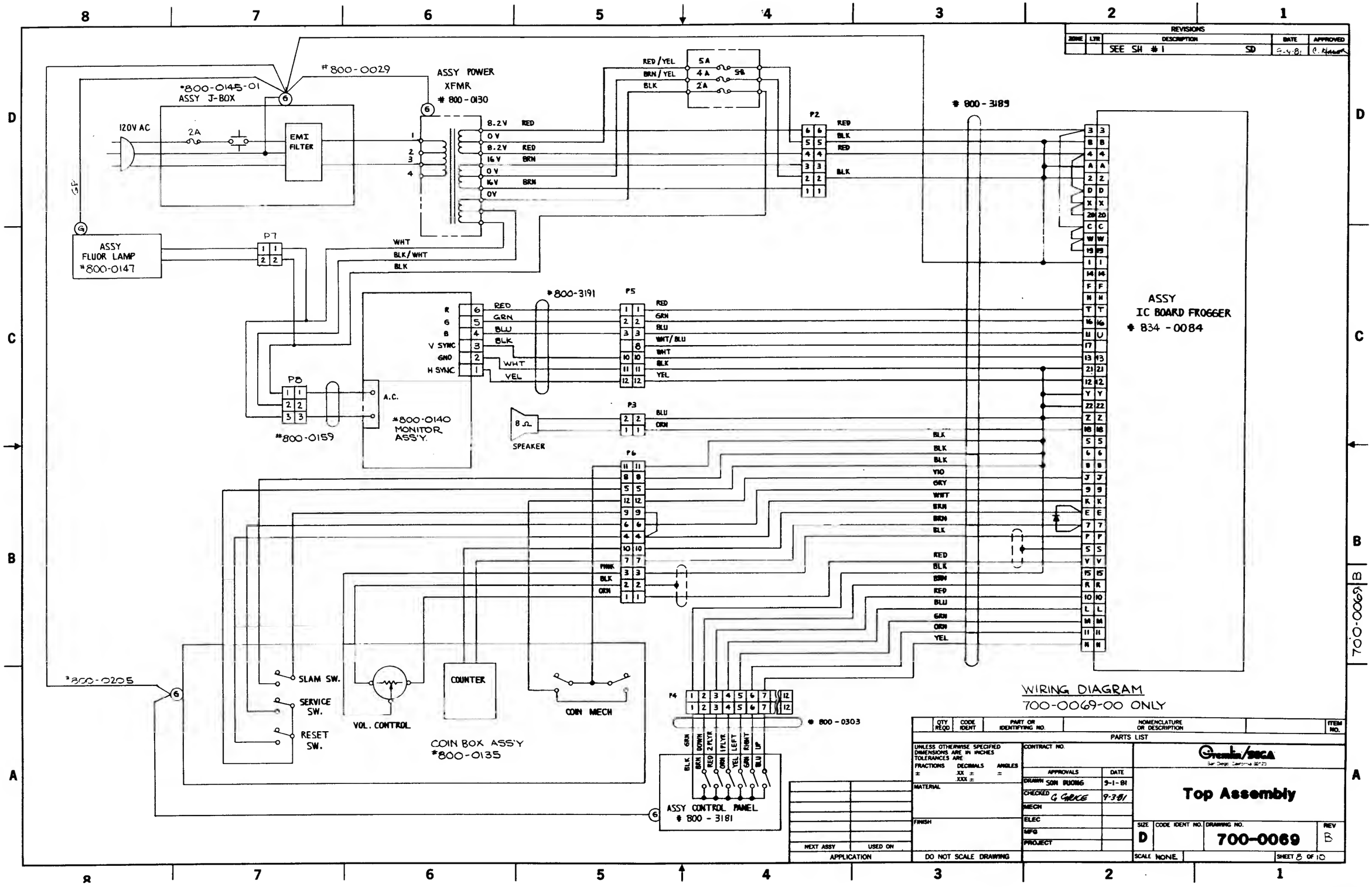
REVISIONS
SEE SH #1
ASSY POWER XFMR # 800-0130
#800-0029
*800-0145-01 ASSY J-BOX
120V AC
2A
EMI FILTER
ASSY FLUOR LAMP *800-0147
P7
WHT
BLK/WHT
BLK
8.2V RED
0 V
8.2V RED
16 V BRN
0 V
16V BRN
0V
RED/YEL
BRN/YEL
BLK
5A
4A
2A
P2
800-3189
ASSY IC BOARD FROGGER # 834-0084
*800-3191
P5
R
G
B
V SYNC
GND
H SYNC
RED
GRN
BLU
BLK
WHT
YEL
P8
A.C.
*800-0159
*800-0140 MONITOR ASS'Y.
8 Ω
SPEAKER
P3
BLU
ORN
P6
PINK
BLK
ORN
SLAM SW.
SERVICE SW.
RESET SW.
VOL. CONTROL
COUNTER
COIN MECH
COIN BOX ASS'Y *800-0135
*800-0205
P4
800-0303
GRN
BLK
BRN
DOWN
RED
2 PLYR
ORN
1 PLYR
YEL
LEFT
GRN
RIGHT
BLU
UP
ASSY CONTROL PANEL # 800-3181
WIRING DIAGRAM
700-0069-00 ONLY
PARTS LIST
QTY REQD
CODE IDENT
PART OR IDENTIFYING NO.
NOMENCLATURE OR DESCRIPTION
ITEM NO.
UNLESS OTHERWISE SPECIFIED DIMENSIONS ARE IN INCHES TOLERANCES ARE
FRACTIONS ±
DECIMALS .XX ± .XXX ±
ANGLES ±
MATERIAL
FINISH
DO NOT SCALE DRAWING
CONTRACT NO.
APPROVALS
DATE
DRAWN SON DUONG 9-1-81
CHECKED G. GARCIA 9-3-81
MECH
ELEC
MFG
PROJECT
NEXT ASSY
USED ON
APPLICATION
Gremlin/SEGA
San Diego, California 92123
Top Assembly
SIZE D
CODE IDENT NO.
DRAWING NO. 700-0069
REV B
SCALE NONE.
SHEET 8 OF 10
700-0069

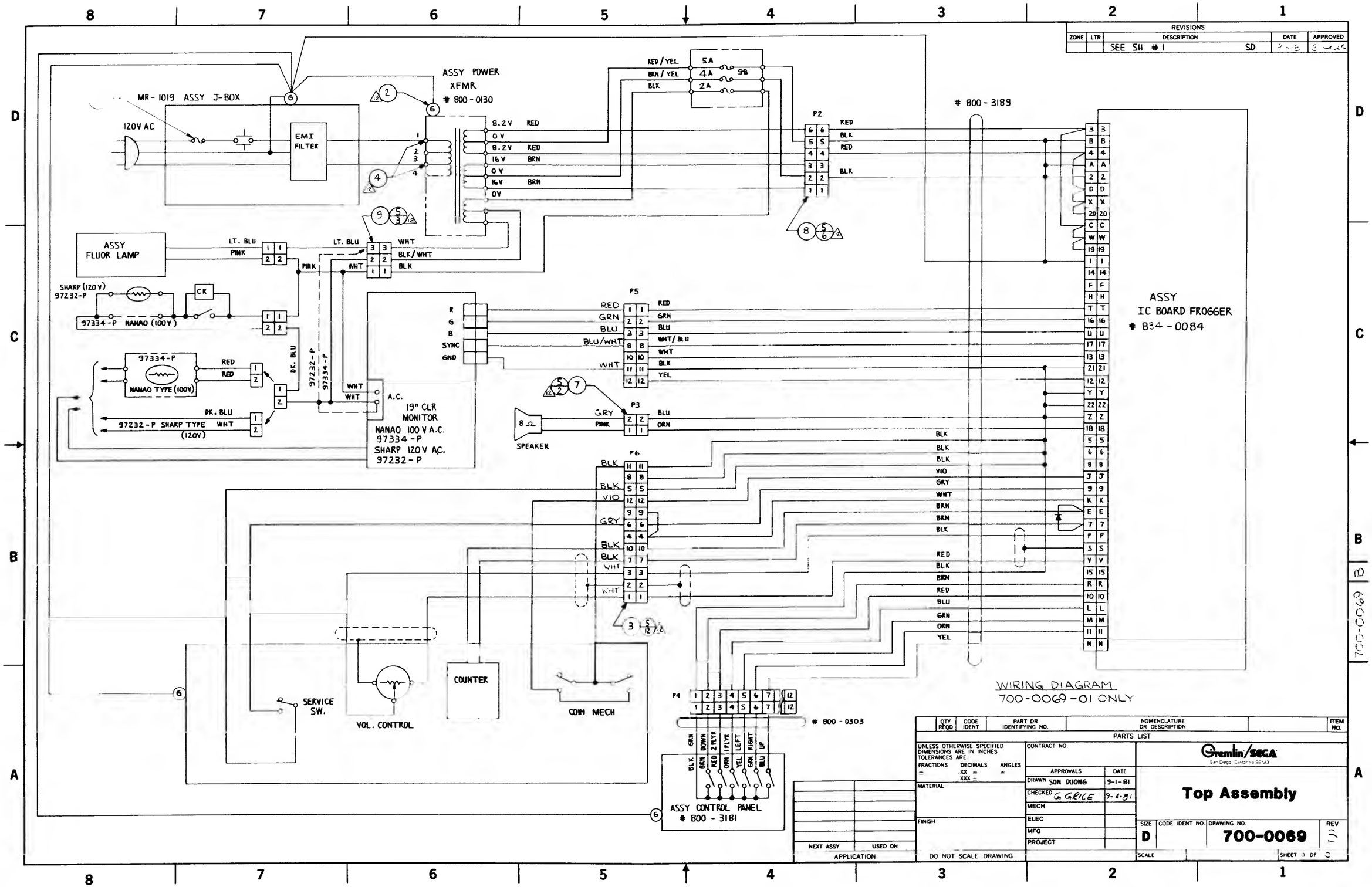
REVISIONS
ZONE LTR DESCRIPTION DATE APPROVED
SEE SH #1 SD
MR-1019 ASSY J-BOX
120V AC
EMI FILTER
ASSY POWER XFMR # 800-0130
8.2V RED
0V
8.2V RED
16V BRN
0V
16V BRN
0V
RED/YEL 5A
BRN/YEL 4A
BLK 2A
5B
P2
800-3189
ASSY FLUOR LAMP
LT. BLU
PINK
WHT
BLK/WHT
BLK
SHARP (120V) 97232-P
CR
97334-P NANAO (100V)
97334-P
NANAO TYPE (100V)
RED
DK. BLU
97232-P SHARP TYPE (120V)
WHT
97232-P
97334-P
A.C.
19" CLR MONITOR
NANAO 100V A.C. 97334-P
SHARP 120V AC. 97232-P
R
G
B
SYNC
GND
P5
RED
GRN
BLU
BLU/WHT
WHT
YEL
P3
GRY
PINK
BLU
ORN
8Ω
SPEAKER
P6
BLK
VIO
GRY
WHT
BRN
RED
BLU
GRN
ORN
YEL
ASSY IC BOARD FROGGER # 834-0084
SERVICE SW.
VOL. CONTROL
COUNTER
COIN MECH
P4
800-0303
GRN DOWN
BLK BRN RED ORN YEL GRN BLU
2 PLYR 1 PLYR LEFT RIGHT UP
ASSY CONTROL PANEL # 800-3181
WIRING DIAGRAM 700-0069-01 ONLY
QTY REQD CODE IDENT PART OR IDENTIFYING NO. NOMENCLATURE OR DESCRIPTION ITEM NO.
PARTS LIST
UNLESS OTHERWISE SPECIFIED DIMENSIONS ARE IN INCHES TOLERANCES ARE.
FRACTIONS ± DECIMALS .XX ± .XXX ± ANGLES ±
MATERIAL
FINISH
DO NOT SCALE DRAWING
NEXT ASSY USED ON
APPLICATION
CONTRACT NO.
APPROVALS DATE
DRAWN SON DUONG 9-1-81
CHECKED G. GRICE 9-4-81
MECH
ELEC
MFG
PROJECT
Gremlin/SEGA
San Diego, California 92123
Top Assembly
SIZE D
CODE IDENT NO.
DRAWING NO. 700-0069
REV
SCALE
SHEET 1 OF 1
700-0069

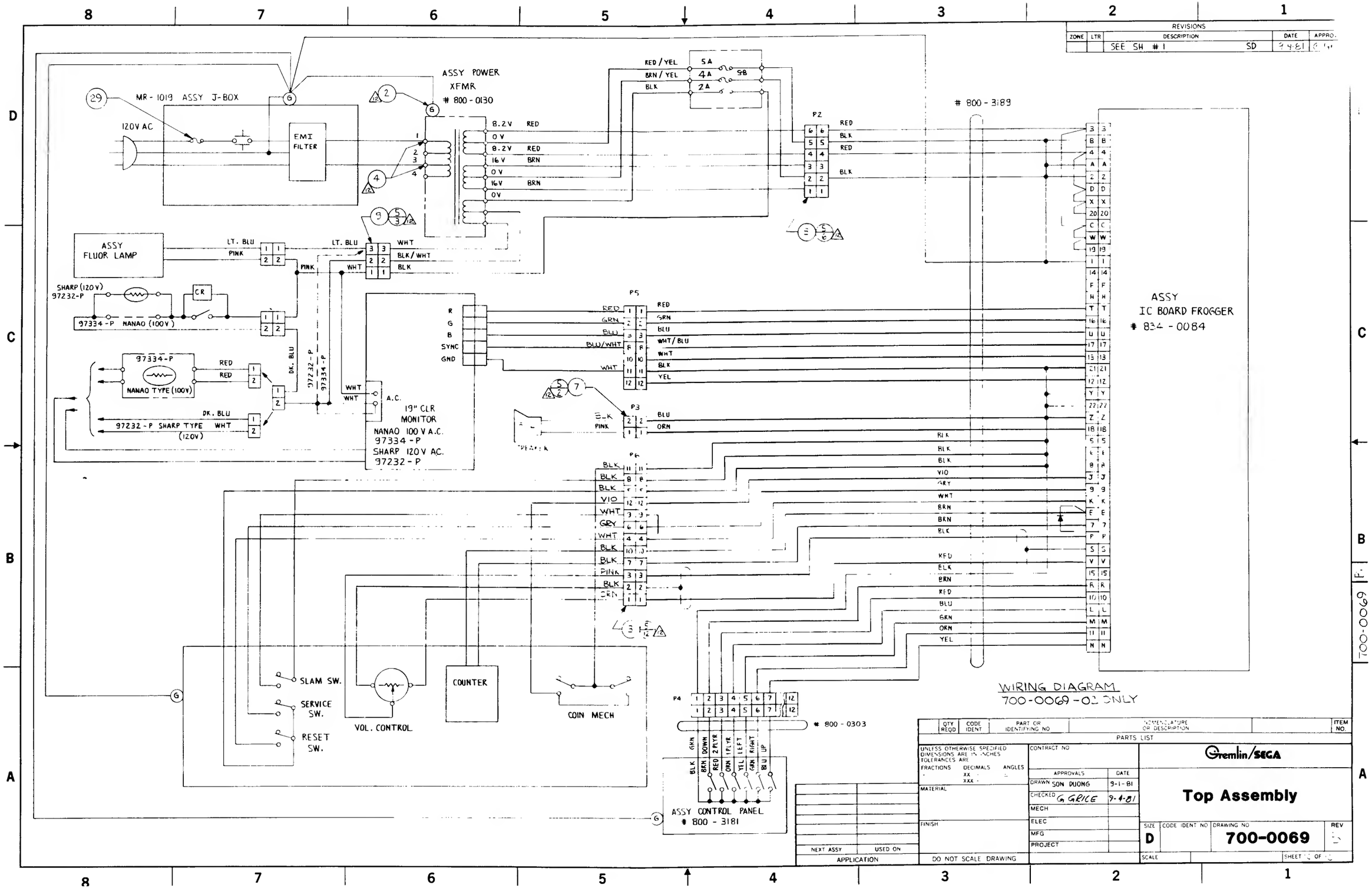
REVISIONS
ZONE LTR DESCRIPTION DATE APPRO.
SEE SH #1 SD 9-4-81
MR-1019 ASSY J-BOX
120V AC
EMI FILTER
ASSY POWER XFMR # 800-0130
8.2V RED
0V
8.2V RED
16V BRN
0V
16V BRN
0V
RED/YEL
BRN/YEL
BLK
5A
4A
2A
SB
P2
800-3189
ASSY FLUOR LAMP
LT. BLU
PINK
WHT
BLK/WHT
BLK
SHARP (120V) 97232-P
CR
97334-P NANAO (100V)
97334-P
NANAO TYPE (100V)
RED
DK. BLU
97232-P SHARP TYPE (120V)
WHT
A.C.
19" CLR MONITOR
NANAO 100 V A.C. 97334-P
SHARP 120 V AC. 97232-P
R
G
B
SYNC
GND
P5
GRN
BLU
BLU/WHT
YEL
P3
ORN
P6
VIO
GRY
BRN
P4
SLAM SW.
SERVICE SW.
RESET SW.
VOL. CONTROL
COUNTER
COIN MECH
800-0303
GRN
DOWN
2 PLYR
1 PLYR
LEFT
RIGHT
UP
ASSY CONTROL PANEL # 800-3181
ASSY IC BOARD FROGGER # 834-0084
WIRING DIAGRAM 700-0069-02 ONLY
QTY REQD CODE IDENT PART OR IDENTIFYING NO NOMENCLATURE OR DESCRIPTION ITEM NO.
PARTS LIST
UNLESS OTHERWISE SPECIFIED DIMENSIONS ARE IN INCHES TOLERANCES ARE
FRACTIONS DECIMALS ANGLES
MATERIAL
FINISH
DO NOT SCALE DRAWING
CONTRACT NO
APPROVALS DATE
DRAWN SON DUONG 9-1-81
CHECKED G. GRICE 9-4-81
MECH
ELEC
MFG
PROJECT
NEXT ASSY USED ON
APPLICATION
Gremlin/SEGA
Top Assembly
SIZE D CODE IDENT NO DRAWING NO 700-0069 REV
SCALE SHEET OF
700-0069

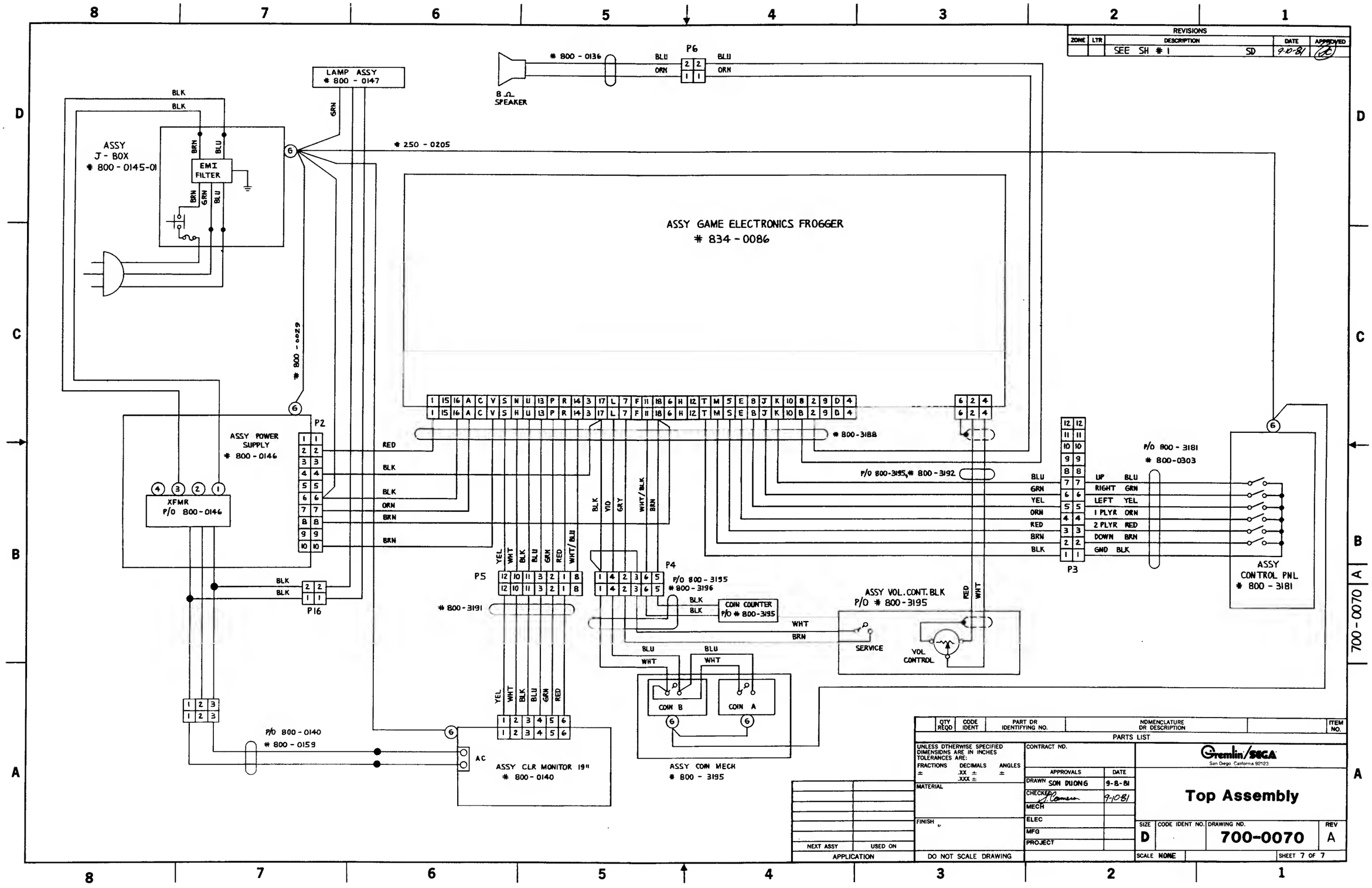
REVISIONS
ZONE LTR DESCRIPTION DATE APPROVED
SEE SH # 1 SD 9-10-81
LAMP ASSY # 800 - 0147
800 - 0136
P6
8 Ω SPEAKER
ASSY J - BOX # 800 - 0145-01
EMI FILTER
250 - 0205
ASSY GAME ELECTRONICS FROGGER # 834 - 0086
800 - 0229
800-3188
P/O 800-3195, # 800 - 3192
P/O 800 - 3181 # 800-0303
UP
RIGHT
LEFT
1 PLYR
2 PLYR
DOWN
GND
P3
ASSY CONTROL PNL # 800 - 3181
ASSY POWER SUPPLY # 800 - 0146
P2
XFMR P/O 800-0146
P16
P5
800-3191
P4
P/O 800 - 3195 # 800 - 3196
COIN COUNTER P/O # 800-3195
ASSY VOL. CONT. BLK P/O # 800-3195
SERVICE
VOL CONTROL
COIN B
COIN A
ASSY COIN MECH # 800 - 3195
P/O 800 - 0140 # 800 - 0159
AC
ASSY CLR MONITOR 19" # 800 - 0140
PARTS LIST
QTY REQD CODE IDENT PART OR IDENTIFYING NO. NOMENCLATURE OR DESCRIPTION ITEM NO.
UNLESS OTHERWISE SPECIFIED DIMENSIONS ARE IN INCHES TOLERANCES ARE:
FRACTIONS ± DECIMALS .XX ± .XXX ± ANGLES ±
MATERIAL
FINISH
NEXT ASSY USED ON
APPLICATION
DO NOT SCALE DRAWING
CONTRACT NO.
APPROVALS DATE
DRAWN SON DUONG 9-8-81
CHECKED 9-10-81
MECH
ELEC
MFG
PROJECT
Gremlin/SEGA San Diego California 92123
Top Assembly
SIZE D CODE IDENT NO. DRAWING NO. 700-0070 REV A
SCALE NONE SHEET 7 OF 7
700-0070 A

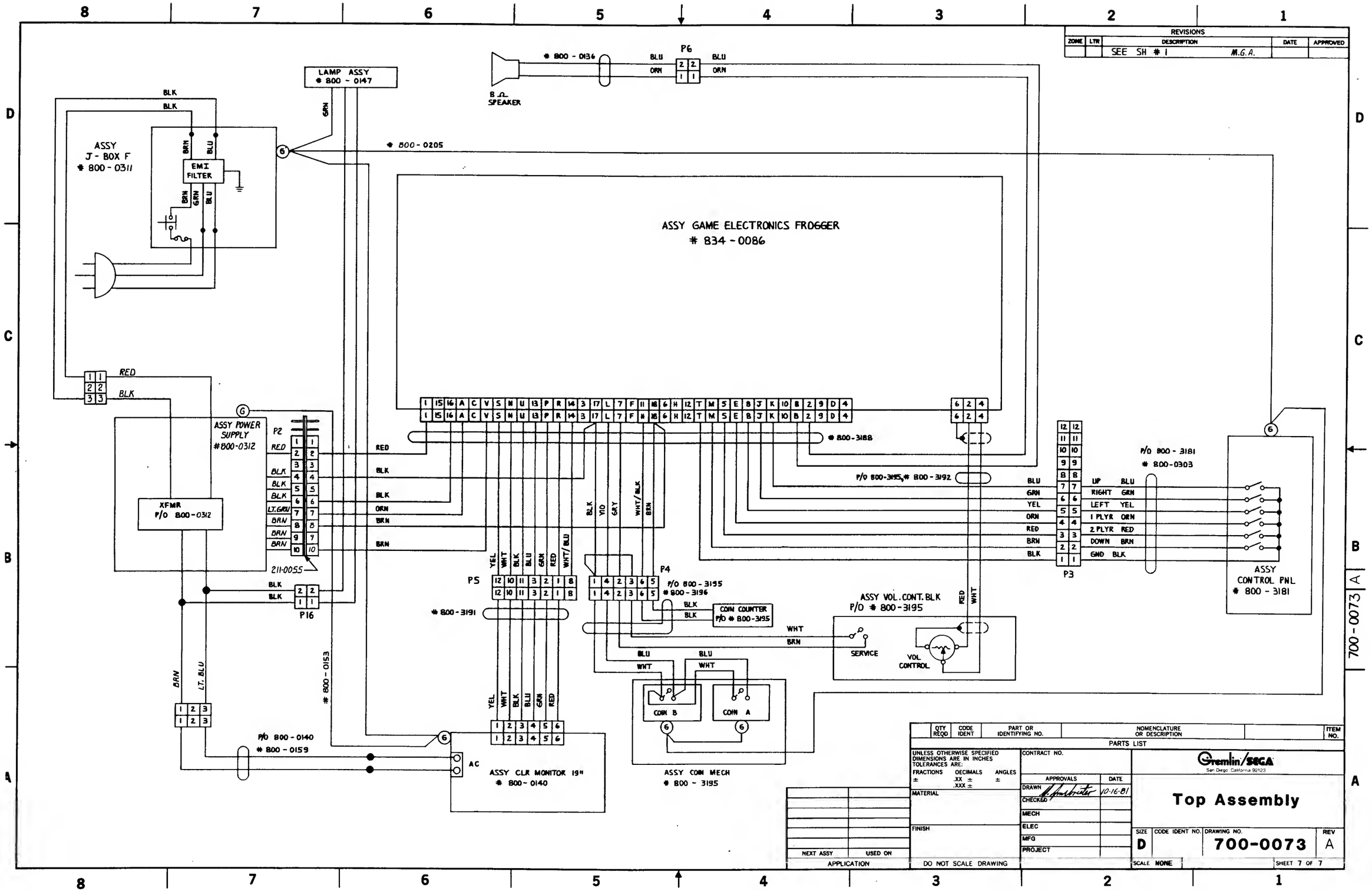
REVISIONS
ZONE LTR DESCRIPTION DATE APPROVED
SEE SH # 1 M.G.A.
LAMP ASSY # 800 - 0147
800 - 0136
P6
8 Ω SPEAKER
ASSY J - BOX F # 800 - 0311
EMI FILTER
800 - 0205
ASSY GAME ELECTRONICS FROGGER # 834 - 0086
800-3188
P/O 800-3195, # 800 - 3192
P/O 800 - 3181 # 800-0303
ASSY CONTROL PNL # 800 - 3181
ASSY POWER SUPPLY #800-0312
XFMR P/O 800-0312
211-0055
P16
P5
800 - 3191
P4
P/O 800 - 3195 # 800 - 3196
COIN COUNTER P/O # 800-3195
ASSY VOL. CONT. BLK P/O # 800-3195
SERVICE
VOL CONTROL
COIN B
COIN A
800 - 0153
P/O 800 - 0140 # 800 - 0159
AC
ASSY CLR MONITOR 19" # 800 - 0140
ASSY COIN MECH # 800 - 3195
700-0073
PARTS LIST
QTY REQD CODE IDENT PART OR IDENTIFYING NO. NOMENCLATURE OR DESCRIPTION ITEM NO.
UNLESS OTHERWISE SPECIFIED DIMENSIONS ARE IN INCHES TOLERANCES ARE:
FRACTIONS ± DECIMALS .XX ± .XXX ± ANGLES ±
MATERIAL
FINISH
DO NOT SCALE DRAWING
CONTRACT NO.
APPROVALS DATE
DRAWN 10-16-81
CHECKED
MECH
ELEC
MFG
PROJECT
NEXT ASSY USED ON
APPLICATION
Gremlin/SEGA
San Diego California 92123
Top Assembly
SIZE D CODE IDENT NO. DRAWING NO. 700-0073 REV A
SCALE NONE SHEET 7 OF 7

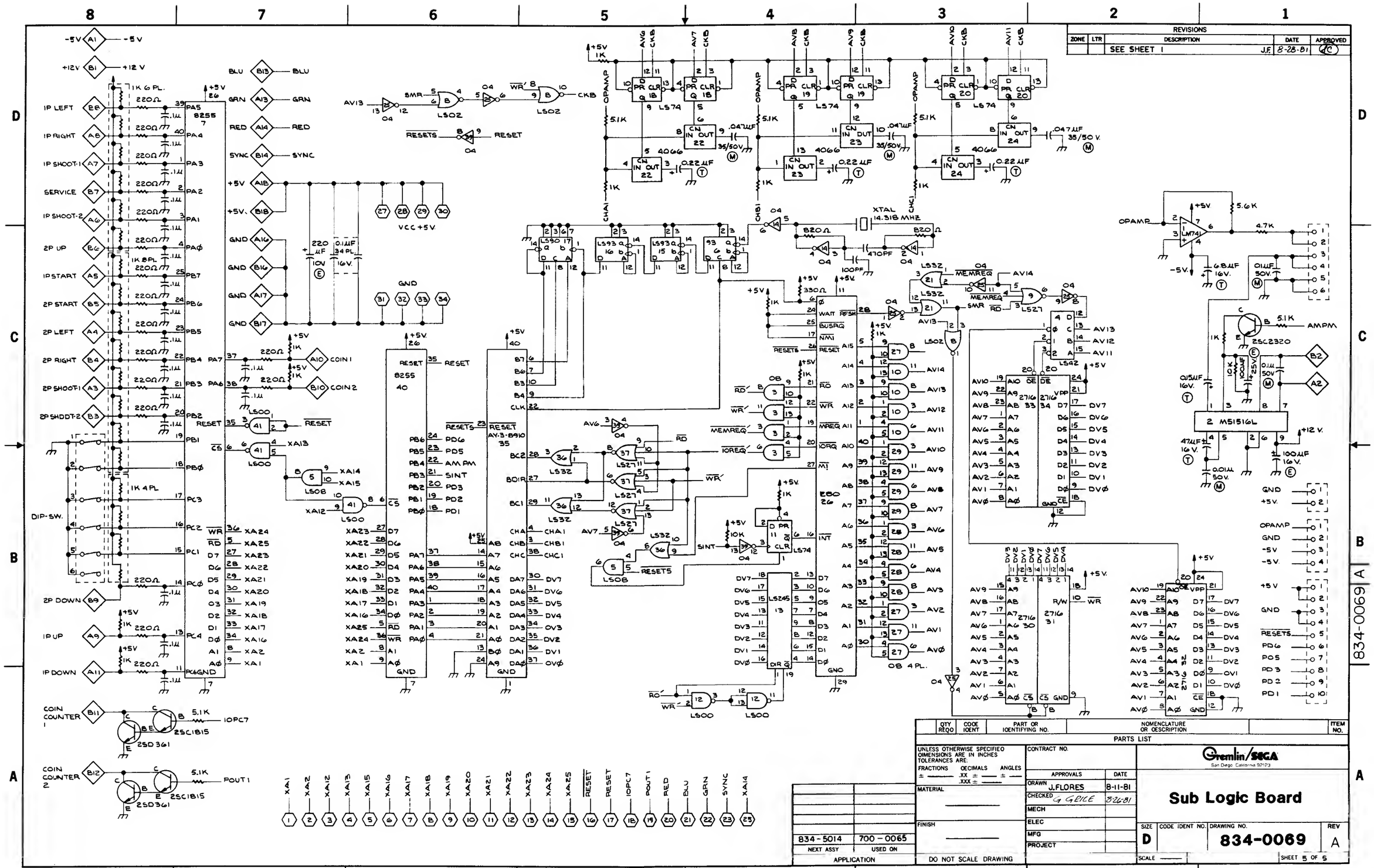
REVISIONS
ZONE | LTR | DESCRIPTION | DATE | APPROVED
SEE SHEET 1 J.F. 8-28-81
IP LEFT
IP RIGHT
IP SHOOT-1
SERVICE
IP SHOOT-2
2P UP
IP START
2P START
2P LEFT
2P RIGHT
2P SHOOT-1
2P SHOOT-2
DIP-SW.
2P DOWN
IP UP
IP DOWN
COIN COUNTER 1
COIN COUNTER 2
8255
VCC +5V
GND
COIN 1
COIN 2
XTAL 14.318 MHZ
OPAMP
2716
M5L5166
2SC2320
LM741
PARTS LIST
QTY REQD | CODE IDENT | PART OR IDENTIFYING NO. | NOMENCLATURE OR DESCRIPTION | ITEM NO.
UNLESS OTHERWISE SPECIFIED DIMENSIONS ARE IN INCHES TOLERANCES ARE:
FRACTIONS ± | DECIMALS .XX ± .XXX ± | ANGLES ±
MATERIAL
FINISH
DO NOT SCALE DRAWING
CONTRACT NO.
APPROVALS | DATE
DRAWN J.FLORES 8-11-81
CHECKED G GRICE 8-26-81
MECH
ELEC
MFG
PROJECT
834-5014 NEXT ASSY
700-0065 USED ON
APPLICATION
Gremlin/SEGA
San Diego, California 92123
Sub Logic Board
SIZE D
CODE IDENT NO.
DRAWING NO. 834-0069
REV A
SCALE
SHEET 5 OF 5
834-0069 A

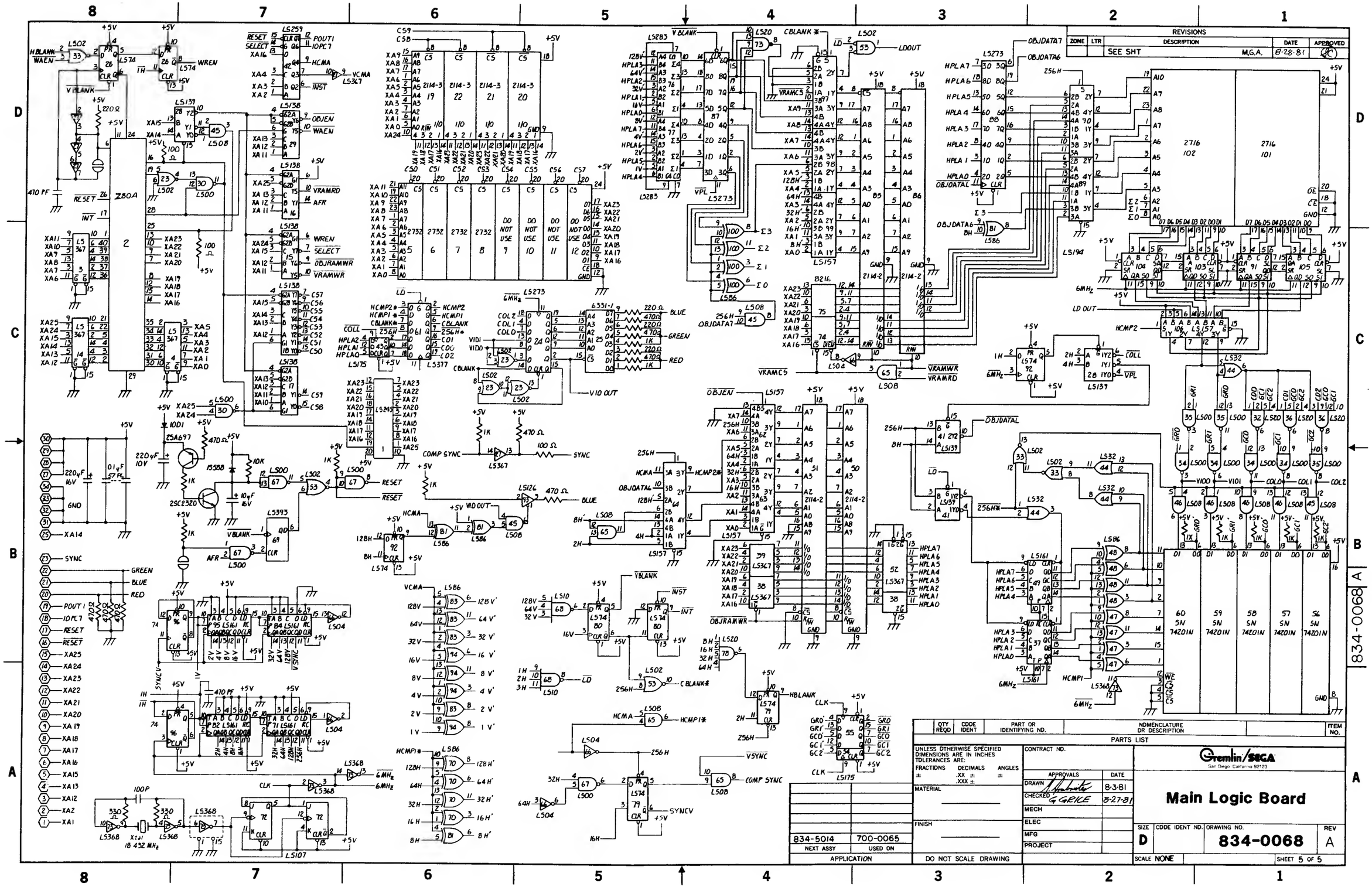
REVISIONS
ZONE | LTR | DESCRIPTION | DATE | APPROVED
SEE SHT M.G.A. 8-28-81
2716 102
2716 101
Z80A
2114-3
2732
6331-1
2114-2
74201N
834-0068 A
PARTS LIST
UNLESS OTHERWISE SPECIFIED DIMENSIONS ARE IN INCHES TOLERANCES ARE:
FRACTIONS ± DECIMALS .XX ± .XXX ± ANGLES ±
MATERIAL
FINISH
DO NOT SCALE DRAWING
CONTRACT NO.
APPROVALS DATE
DRAWN 8-3-81
CHECKED G GRICE 8-27-81
MECH
ELEC
MFG
PROJECT
Gremlin/SEGA
San Diego California 92123
Main Logic Board
SIZE D
CODE IDENT NO.
DRAWING NO. 834-0068
REV A
SCALE NONE
SHEET 5 OF 5
834-5014 NEXT ASSY
700-0065 USED ON
APPLICATION

REVISIONS				
ZONE	LTR	DESCRIPTION	DATE	APPROVED
	A	RELEASED CTC/LVH	7-23-80	
	B	PER ECN # 554	12-09-80	JP
	C	PER ECN # 546	12-09-80	JP
	D	PER ECN # 565	12-10-80	JP
	E	PER ECN 631 WJB	1-26-81	
	F	PER ECN 800 CTC	4-20-81	Jeff Ranz

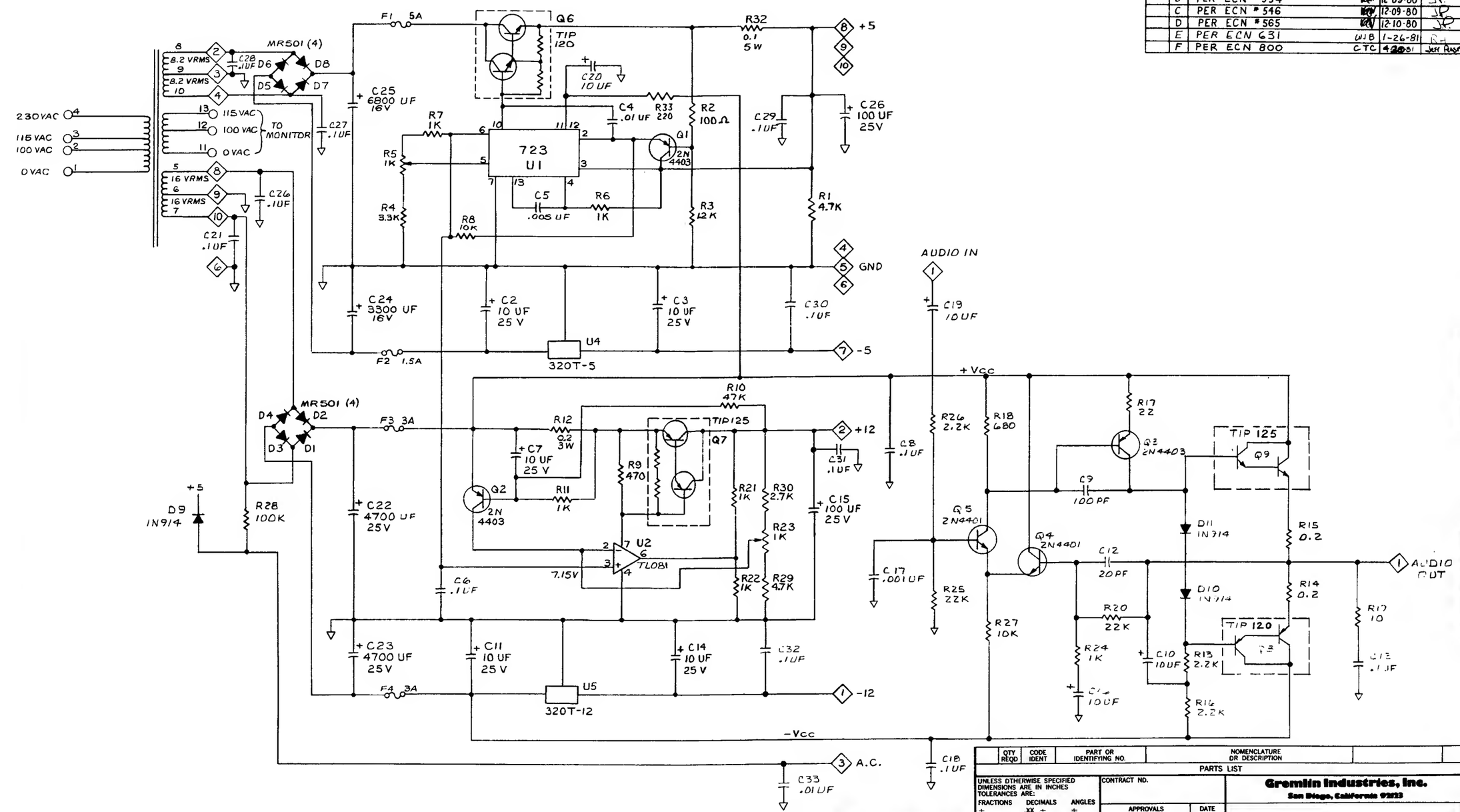

QTY REQD	CODE IDENT	PART OR IDENTIFYING NO.	NOMENCLATURE OR DESCRIPTION

PARTS LIST

UNLESS OTHERWISE SPECIFIED DIMENSIONS ARE IN INCHES
TOLERANCES ARE:
FRACTIONS ± DECIMALS .XX ± .XXX ± ANGLES ±

MATERIAL

FINISH

DO NOT SCALE DRAWING

CONTRACT NO.

APPROVALS	DATE
DRAWN CTC Dien van Ho	7-2-80
CHECKED Ken Hamm	7-23-80

Gremlin Industries, Inc.
San Diego, California 92123

Game Power Supply

SIZE D | CODE IDENT NO. | DRAWING NO. 800-0128 | REV. F

SCALE NONE | SHEET 6 OF 6

800-0146
NEXT ASSY | USED ON
APPLICATION

NOTES: UNLESS OTHERWISE INDICATED

1. ALL RESISTANCE VALUES ARE IN OHMS, 1/2 W, ±5%.

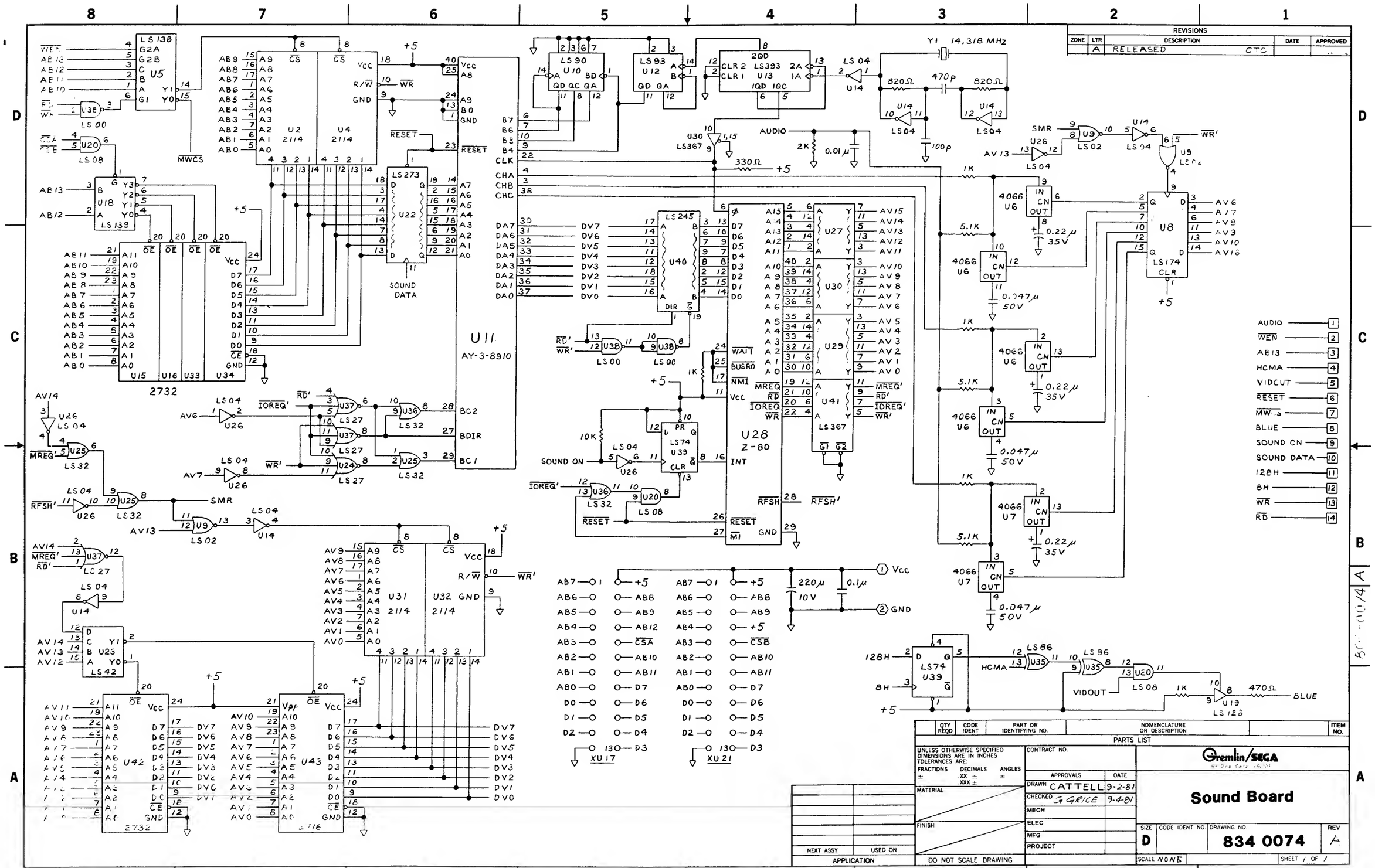
REVISIONS
ZONE | LTR | DESCRIPTION | DATE | APPROVED
A | RELEASED CTC
U5 LS138
U2 2114
U4 2114
U18 LS139
U15 U16 U33 U34 2732
U22 LS273
U11 AY-3-8910
U10 LS90
U12 LS93
U13 LS393
Y1 14.318 MHz
U40 LS245
U28 Z-80
U27 U30 U29 U41 LS367
U39 LS74
U8 LS174
U6 U7 4066
U31 U32 2114
U42 U43 2732 2716
U23 LS42
U19 LS125
U35 LS86
U20 LS08
U25 U24 U37 U36 LS32
U9 LS02
U14 LS04
U38 LS00
U20 LS08
MWCS
RESET
SOUND DATA
SOUND ON
AUDIO
SMR
VIDOUT
HCMA
BLUE
XU17
XU21
AUDIO
WEN
AB13
HCMA
VIDOUT
RESET
MWCS
BLUE
SOUND ON
SOUND DATA
128H
8H
WR
RD
PARTS LIST
QTY REQD | CODE IDENT | PART OR IDENTIFYING NO. | NOMENCLATURE OR DESCRIPTION | ITEM NO.
UNLESS OTHERWISE SPECIFIED DIMENSIONS ARE IN INCHES TOLERANCES ARE:
FRACTIONS ± DECIMALS .XX ± .XXX ± ANGLES ±
MATERIAL
FINISH
DO NOT SCALE DRAWING
NEXT ASSY | USED ON
APPLICATION
CONTRACT NO.
APPROVALS | DATE
DRAWN CATTELL 9-2-81
CHECKED G GRICE 9-4-81
MECH
ELEC
MFG
PROJECT
Gremlin/SEGA
Sound Board
SIZE D | CODE IDENT NO. | DRAWING NO 834 0074 | REV A
SCALE NONE
SHEET 1 OF 1

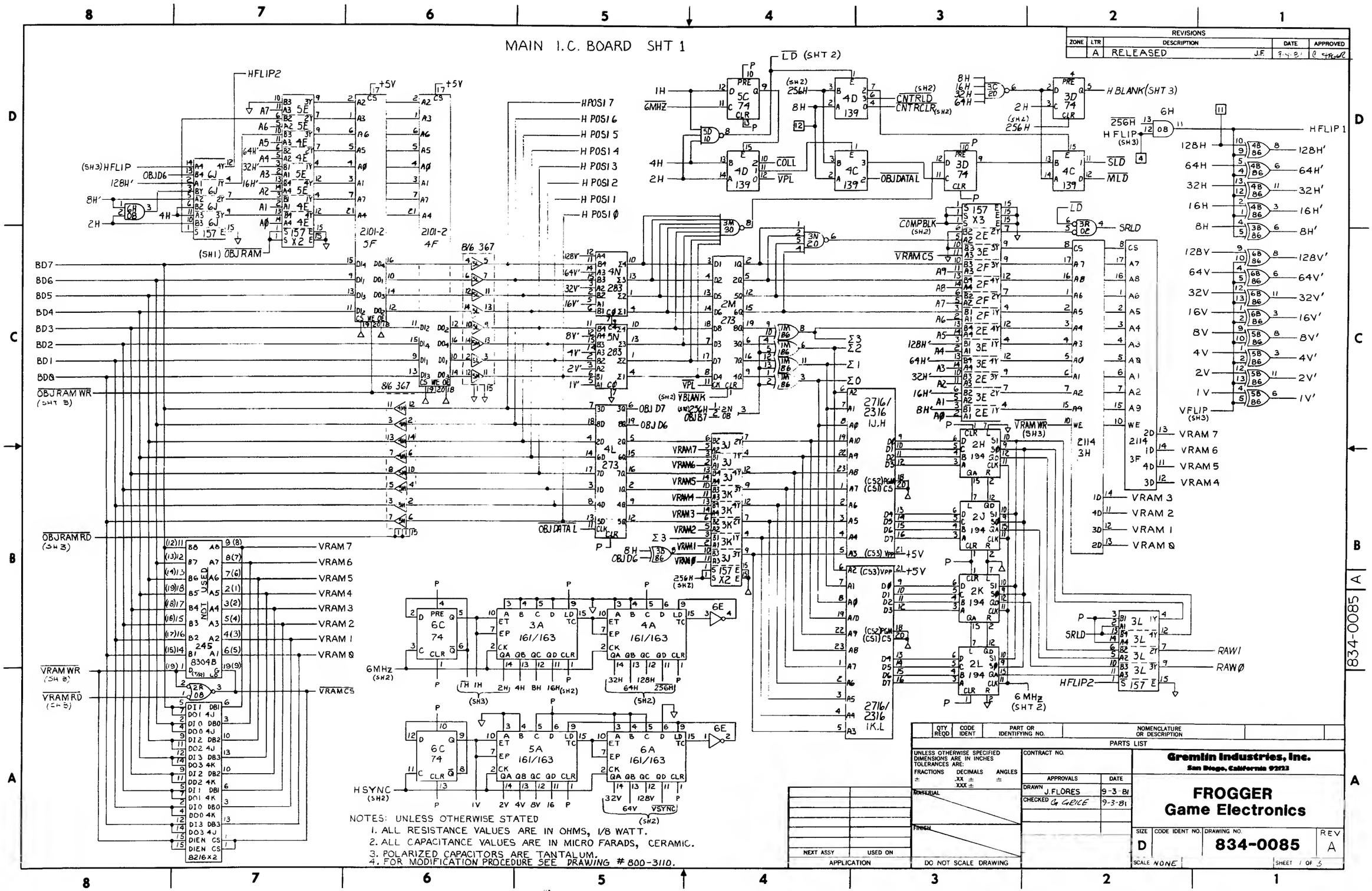
MAIN I.C. BOARD SHT 1
REVISIONS
ZONE LTR DESCRIPTION DATE APPROVED
A RELEASED J.F. 9-4-81
NOTES: UNLESS OTHERWISE STATED
1. ALL RESISTANCE VALUES ARE IN OHMS, 1/8 WATT.
2. ALL CAPACITANCE VALUES ARE IN MICRO FARADS, CERAMIC.
3. POLARIZED CAPACITORS ARE TANTALUM.
4. FOR MODIFICATION PROCEDURE SEE DRAWING # 800-3110.
PARTS LIST
Gremlin Industries, Inc.
San Diego, California 92123
FROGGER
Game Electronics
834-0085
REV A
SIZE D
SCALE NONE
SHEET 1 OF 3
DO NOT SCALE DRAWING
APPROVALS DATE
DRAWN J. FLORES 9-3-81
CHECKED G. GRICE 9-3-81
CONTRACT NO.
UNLESS OTHERWISE SPECIFIED DIMENSIONS ARE IN INCHES TOLERANCES ARE:
FRACTIONS ± DECIMALS .XX ± .XXX ± ANGLES ±
MATERIAL
FINISH
NEXT ASSY USED ON
APPLICATION
QTY REQD CODE IDENT PART OR IDENTIFYING NO. NOMENCLATURE OR DESCRIPTION
834-0085

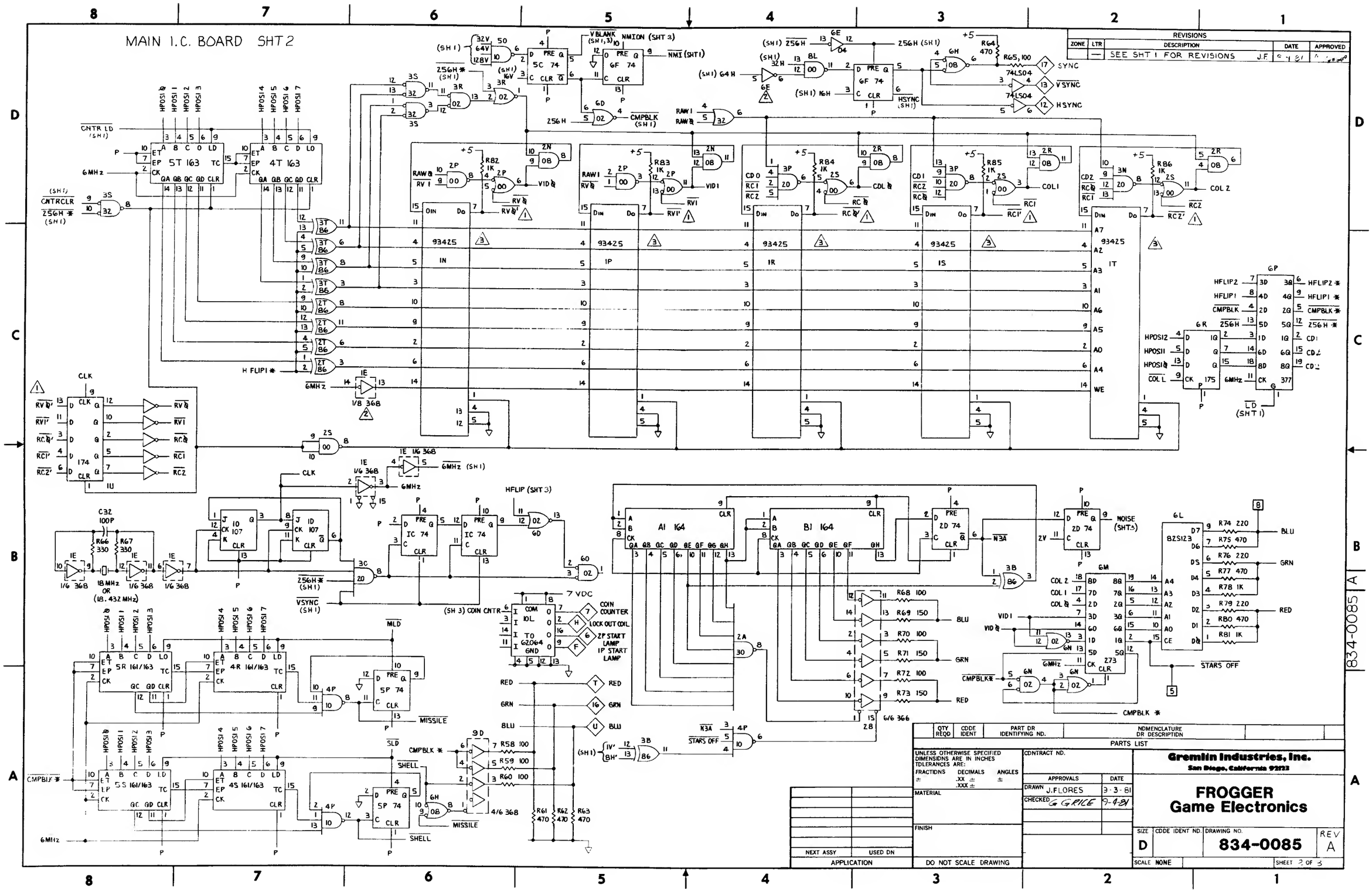
MAIN I.C. BOARD SHT 2
REVISIONS
ZONE LTR DESCRIPTION DATE APPROVED
SEE SHT 1 FOR REVISIONS J.F.
5T 163
4T 163
5R 161/163
4R 161/163
5S 161/163
4S 161/163
93425
A1 164
B1 164
5C 74
6F 74
IC 74
2D 74
5P 74
174
175
273
377
SYNC
VSYNC
HSYNC
COIN COUNTER
LOCK OUT COIL
2P START LAMP
1P START LAMP
STARS OFF
MISSILE
SHELL
NOISE (SHT 3)
HFLIP (SHT 3)
COIN CNTR
7 VDC
6MHz
18 MHz OR (18.432 MHz)
CMPBLK *
PARTS LIST
QTY REQD | CODE IDENT | PART OR IDENTIFYING NO. | NOMENCLATURE OR DESCRIPTION
UNLESS OTHERWISE SPECIFIED DIMENSIONS ARE IN INCHES TOLERANCES ARE:
FRACTIONS ± DECIMALS .XX ± .XXX ± ANGLES ±
MATERIAL
FINISH
DO NOT SCALE DRAWING
CONTRACT NO.
APPROVALS DATE
DRAWN J.FLORES 9-3-81
CHECKED G GRICE 9-4-81
NEXT ASSY USED ON
APPLICATION
Gremlin Industries, Inc.
San Diego, California 92123
FROGGER
Game Electronics
SIZE D CODE IDENT NO. DRAWING NO. 834-0085 REV A
SCALE NONE SHEET 2 OF 3
834-0085 A

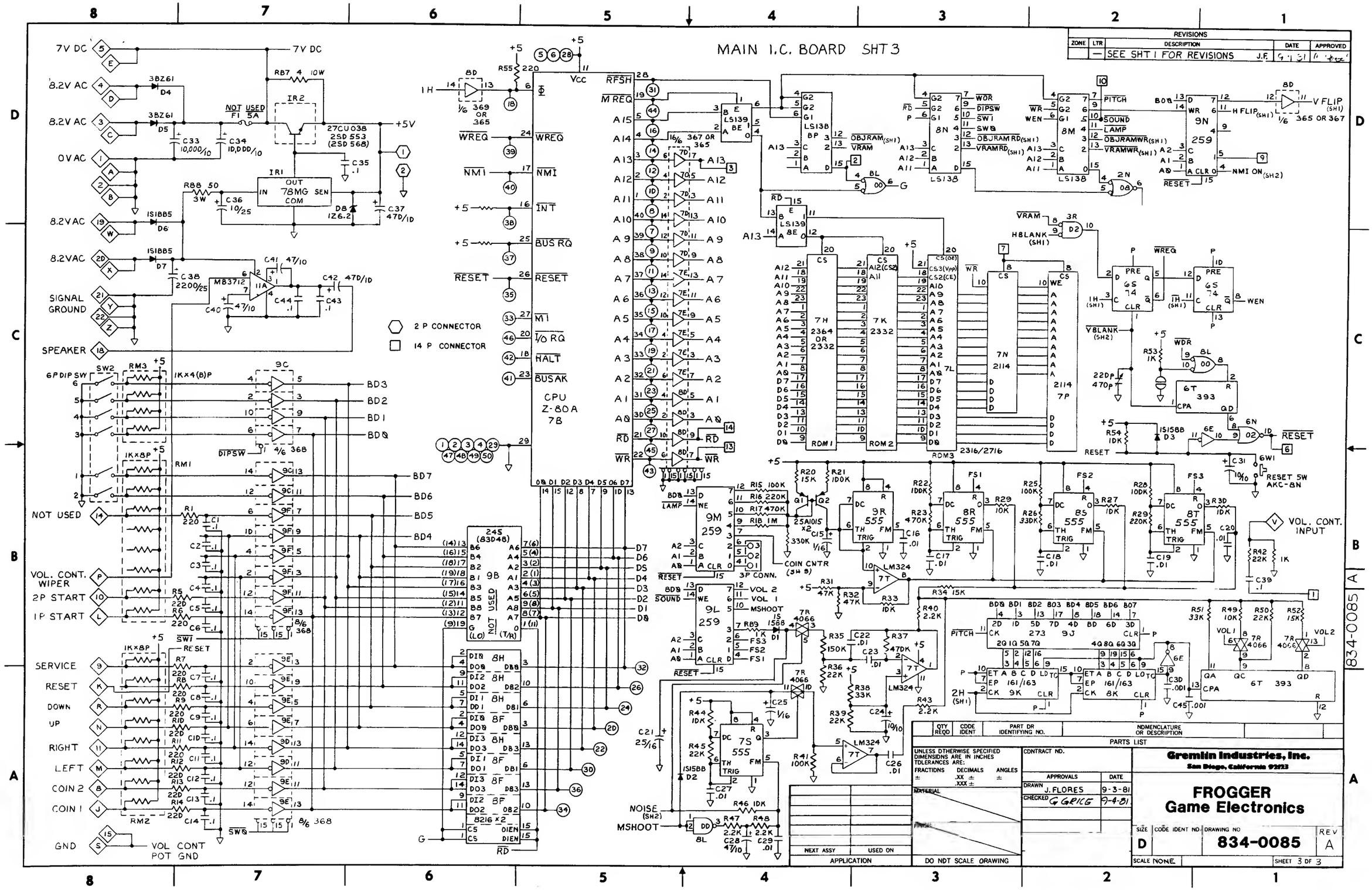
MAIN I.C. BOARD SHT 3
REVISIONS
ZONE | LTR | DESCRIPTION | DATE | APPROVED
— | SEE SHT 1 FOR REVISIONS J.F.
7V DC
8.2V AC
0V AC
SIGNAL GROUND
SPEAKER
NOT USED
VOL. CONT. WIPER
2P START
1P START
SERVICE
RESET
DOWN
UP
RIGHT
LEFT
COIN 2
COIN 1
GND
VOL CONT POT GND
2 P CONNECTOR
14 P CONNECTOR
CPU Z-80A 7B
7H 2364 OR 2332
7K 2332
7L 2316/2716
7N 2114
7P 2114
9M 259
9L 259
9N 259
8N LS138
8M LS138
9R 555
8R 555
8S 555
8T 555
7T LM324
7S 555
9J 273
9K 161/163
8K 161/163
6T 393
6N 02
9B 245 (83D48)
8H 8216 x2
8F 8216 x2
3P CONN.
COIN CNTR (SW 9)
RESET SW AKC-8N
VOL. CONT. INPUT
V FLIP (SH1)
H FLIP (SH1)
NMI ON (SH2)
H BLANK (SH1)
NOISE (SH2)
MSHOOT
PARTS LIST
QTY REQD | CODE IDENT | PART OR IDENTIFYING NO. | NOMENCLATURE OR DESCRIPTION
UNLESS OTHERWISE SPECIFIED DIMENSIONS ARE IN INCHES TOLERANCES ARE:
FRACTIONS ± | DECIMALS .XX ± .XXX ± | ANGLES ±
CONTRACT NO.
APPROVALS | DATE
DRAWN J. FLORES 9-3-81
CHECKED G GRIGG 9-4-81
MATERIAL
FINISH
NEXT ASSY | USED ON
APPLICATION
DO NOT SCALE DRAWING
Gremlin Industries, Inc.
San Diego, California 92123
FROGGER
Game Electronics
SIZE D | CODE IDENT NO. | DRAWING NO 834-0085 | REV A
SCALE NONE
SHEET 3 OF 3
834-0085 A